TRYCLOPS

X – Purge Controller

XP Version

IOM Manual

This page intentionally left blank

Information in this document is subject to change without notice. All terms mentioned in this manual that are known to be trademarks have been appropriately capitalized. Purge Solutions, Inc. acknowledges all trademark(s) and the rights of the trademark(s) owned by the company referred to herein.

592 Avenue E 1/2, Alvin, Texas 77511 USA

Phone: 832-368-7166

Fax: 281-824-4418

E-mail: info@purgesolutions.com

Web site: http://www.purgesolutions.com

Release Date: 25-November-2003

Document Number: DO-30019-P

© Copyright 2003 by Purge Solutions, Inc.

All rights reserved

Revision Record		
Rev.	**Description**	**Date**
A	Initial Release	25-Nov-03
B	Several Revisions	29-June-04
C	Several Revisions	27-May-05
D	Added Recommended Grounding Method	16-Jun-05
E	Added Recommended UL Power Supply Requirements	06-Jan-06
F	Updated Options and Illustrations	11-May-06
G	Updated Options and Illustrations	14-Jan-07
H	Revisions Per Certification Updates	27-Sep-08
I	Several Required Revisions	09-Jun-11
J	Addition of Increase Safety Window Kits	12-Aug-12
K	Company Address Change	11-Dec-13
L	Certification Required Revisions	01-Oct-14
M	Added Storage Temperature Range	21-May-15
N	Change of Address	01-Jun-16
O	Several Warnings and Hazardous Area Additions	19-Jan-19
P	Several Warnings and Hazardous Area Additions	23-Mar-19

Copyright Notice

This document contains information proprietary to Purge Solutions, Inc. with all rights reserved worldwide. Any reproduction or disclosure of this publication, or any part thereof, to persons other than Purge Solutions, Inc. personnel or customers is strictly prohibited, except by written permission of Purge Solutions, Inc. Unauthorized use, disclosure, reproduction, or translation of this publication will result in Purge Solutions, Inc. exercising maximum possible legal action against all persons and / or organizations involved.

Disclaimer

Purge Solutions, Inc. makes no representations or warranties with respect to the contents hereof. Further, Purge Solutions, Inc. reserves the right to revise this publication and to make changes in the content hereof, without obligation to notify any person or organization of such revision or changes.

Shipment Arrival Procedures

This shipment has been thoroughly inspected at the factory prior to its delivery to the carrier. After the shipment is picked up by the carrier, it becomes their responsibility. When the shipment arrives, make certain that it is undamaged and complete.

Patent Notice

Manufactured under United States, Worldwide Patents, and Patents Pending.

Trademark Information

Purge Solutions, Inc. and its logo(s) are trademark(s) of Purge Solutions, Inc.

Table of Contents

Legal Notices and Revision History
Inside Front Cover

Section 1

How To Use This Manual 1
Safety Considerations 1
Label Definition Table 2
Locating Information 2
General Safety 3
General Precautions 3
Electrical Power 4
System Location 4
Purge Systems 5

Section 2

Specifications 6
Features Table 6
Normal Operating Conditions Table 6
Utility Requirements Table 7
Environmental Conditions Table 7
Model Number Matrix Tables 8

Section 3

Introduction 9
Description 9
Warranty 12

Section 4

Installation 13
Mounting 13
Electrical Power Installation 18
Power Source Specifications Table 18
Power Connection to Purge Controller Table 19
Power Connection to Equipment Table 19
Power Connection from Purge Controller to Solenoid Valve 20
Alarm Source Specifications Table 21
Alarm Connections Table 21
Normal Operation Mode Alarm Matrix 22
By-Pass Mode Switch Alarm Matrix 22

Section 5

Start Up Procedures 23
Normal Operation Mode Initial Startup Procedure 23
Power Disconnect By-Pass Switch Mode Initial Startup Procedure 35
Normal Operation Mode Maintenance or Service Startup Procedure 51
Power Disconnect By-Pass Switch Mode Maintenance or Service Startup Procedure 57

Section 6

Documents 63
Flow Diagram 66
Exhaust Vents 70
Dimensional General Assemblies 79
Wiring Diagrams 82

Section 7

Options 84

Section 8

Getting Help 88

Section 1
How to Use This IOM Manual

Safety Considerations:

This chapter includes important information that must be read and understood by all persons installing, using, or maintaining this equipment. While this IOM Manual is designed to aid personnel in the correct and safe installation, operation, and maintenance of the systems described. Personnel must consider all actions and procedures for potential hazards or conditions that may not have been anticipated in the written procedures. If a procedure cannot be performed safely, it must not be performed until appropriate actions can be taken to ensure the safety of equipment and personnel. The procedures in this IOM Manual are not designed to replace or supersede required or common sense safety practices. All safety warnings listed in any documents applicable to equipment and parts used in or with the system described in this manual must be read and heeded before commencing work on any part of the system.

***NOTE:* Refer to all ATEX, CEC, IECEx, NEC and NFPA certificates for any Special Conditions of Use. If the sign "X" is placed after the certificate number, it indicates that the equipment or protective system is subject to special conditions for safe use specified in the schedule of the certificate.**

***NOTE:* Review all material and safety information in this manual and install in accordance with this document and all other applicable ATEX, CEC, IECEx, NEC and NFPA standards.**

***WARNING:* Failure to follow appropriate safety procedures or inappropriate use of the equipment described in this manual can lead to injury of personnel or equipment damage.**

***WARNING – EXPLOSION HAZARD –* Do not disconnect equipment unless power has been removed or the area is known to be non-hazardous.**

The following symbols are used throughout this IOM Manual to alert users to potential hazards or important information. ***Failure to heed the warnings and cautions listed herein can lead to injury and equipment damage.***

Document Label Definitions Used to Indicate Potential Hazards		
Symbol	**Label**	**Description**
	WARNING:	Consists of conditions, practices, or procedures that must be observed to prevent injury and / or equipment damage.
	CAUTION:	Risk of electric shock or high temperature parts may result in injury if proper precautions are not taken.
	NOTE:	Emphasizes important or essential information.

Locating Information:

NOTE: ***In the interest of completeness, manuals and drawings included with the system may provide information pertaining to options not included with your equipment. Information in application notes supersedes general information in these documents. Information can be located in this manual using any of the following aids.***

1. Table of Contents
2. Getting Help

General Safety and Operating Information:

This section contains general safety and operating information applicable to electrical equipment installed within hazardous locations. This information must be understood by all persons installing, using, or maintaining the electrical equipment. This information is designed to aid personnel in safe installation, operation, and maintenance of the TRYCLOPS X – Purge Controller, XP Version. It is not designed to replace or limit appropriate safety measures applicable to work performed by personnel. Any additional safety and operating measures that are required must be determined by and followed by personnel performing work on the electrical equipment.

***WARNING:* Deviation from the specified instruction or procedure steps can result in equipment malfunction, equipment damage, or injury to personnel.**

***WARNING:* Return unit to factory for any repairs or replacement of parts, customer not permitted. This will void all warranties and hazardous area certification(s).**

General Precautions:

Protective eyewear ***(glasses with side shields or goggles as appropriate)*** must be worn when servicing any part of electrical equipment. Hot components should be allowed to cool before servicing if possible. Other appropriate equipment or clothing must be used as required by the type of work performed. All applicable regulations and procedures must be followed for the work performed. ***Before*** beginning any work on the equipment, carefully consider all the potential hazards and ensure that appropriate measures are taken to prevent injury to personnel or equipment damage.

***CAUTION:* Applicable permits must be obtained and appropriate precautions must be taken to prevent possible injury to personnel or equipment damage when installing or maintaining this equipment.**

Enclosure shall be marked by the end user identifying enclosure as pressurized. The pressurized enclosure shall be marked the following or similar.

***WARNING:* PRESSURIZED ENCLOSURE.**

To prevent the ignition of an explosive gas atmosphere or a combustible dust atmosphere, which may be present when an enclosure is opened, doors and covers shall be marked the following or similar.

***WARNING:* DO NOT OPEN WHEN AN EXPLOSIVE ATMOSPHERE IS PRESENT.**

Instructions shall be marked on the equipment by the end user to insure proper purging the pressurized enclosure before energizing the electrical equipment. The instructions shall include the following or similar.

***WARNING:* POWER SHALL NOT BE RESTORED AFTER ENCLOSURE HAS BEEN OPENED UNTIL ENCLOSURE HAS BEEN PURGED FOR ___ MINUTES AT A MINIMUM FLOW RATE OF ___.**

For applications located in a Combustible Dust Atmosphere; a warning shall be marked on the equipment stating that combustible dust shall be removed from the interior prior to switching on the electrical supply. The marking shall include the following or similar:

***WARNING:* POWER SHALL NOT BE RESTORED AFTER THE ENCLOSURE HAS BEEN OPENED UNTIL COMBUSTIBLE DUST ACCUMULATIONS WITHIN THE ENCLOSURE HAVE BEEN REMOVED.**

Electrical equipment mounted inside pressurized enclosure may have hot surfaces that exceed the ignition temperature of the flammable or combustible substance located in the hazardous location; even when power has been removed. Take appropriate precautions to prevent injury from contact with hot items or damage to equipment and to allow for adequate cooling; the equipment shall be marked with instructions that include the following or similar.

***WARNING:* DO NOT OPEN ENCLOSURE DOOR OR COVER FOR ____ MINUTES AFTER REMOVING POWER.**

Electrical Power:

The TRYCLOPS X – Purge Controller, XP Version uses AC power of 115 or 230 volts. The AC power is converted to DC. Appropriate precautions must be taken to prevent sparks that may ignite combustible materials that may be present in the purge controller's environment. Precautions must also be taken to prevent electrical shock if the electrical equipment's enclosure being monitored by purge controller is opened.

The power to the TRYCLOPS X – Purge Controller, XP Version must be free from noise, surges, sags, and spikes for proper operation of the purge controller. AC power circuit breakers and wiring must be sized properly for the required current. All wiring installations must meet applicable area electrical codes.

System Location:

TRYCLOPS X – Purge Controller, XP Version must be installed in a suitable location. The TRYCLOPS X – Purge Controller, XP Version must not be installed in an area classification for which it is not rated and must be protected from temperature extremes. The TRYCLOPS X – Purge Controller, XP Version should not be mounted in an area with potentially high vibration. The TRYCLOPS X – Purge Controller, XP Version must be attached securely and appropriately in the general area of the electrical equipment's enclosure(s) being monitored per the mounting instructions page 13. The TRYCLOPS X – Purge Controller, XP Version must be mounted in a location to permit adequate viewing of indicator lights and proper purge exhaust venting.

Purge & Pressurization System Conditions of Safe Use:

CAUTION: ***The safe handling and operation of a purge and pressurization system requires basic knowledge of safety standards with additional training and experience to work on explosion protection equipment.***

CAUTION: ***Applicable permits must be obtained and appropriate precautions must be taken to prevent possible injury to personnel or equipment damage when installing or maintaining this equipment.***

WARNING: ***Enclosures being monitored by a type X – Purge System must not be opened unless power is disconnected from the electrical equipment within enclosure or the area is known not to contain explosive or combustible materials.***

CAUTION: ***This purge unit has an operating temperature of 119°C or T4 temperature class. This operating temperature shall be considered when mounted to the enclosure it will be monitoring.***

NOTE: ***This equipment is suitable for use in Class I, Division 1, Group A, B, C & D, Class II, Division 1, Group F & G, Class III Hazardous Location or unclassified locations.***

NOTE: ***This device is a Purge and Pressurization Type X – System intended to be mounted to an enclosure that would need final assembly to be fully evaluated to NFPA 496, 2017 Edition.***

NOTE: ***This equipment is suitable for use in Zone 1, IIC or Zone 21, IIIC Hazardous Location or unclassified locations.***

NOTE: ***This device is a Purge and Pressurization Type X – System intended to be mounted to an enclosure that would need final assembly to be fully evaluated to IEC 60079-2. For correct evaluation, installation and assembly guidance refer to IEC 60079-2:2014 Edition.***

NOTE: ***Purging of pressurized equipment is not suitable for Combustible Dust Hazardous Locations since purging is likely to cause a dust cloud from purge gas exiting exhaust vent.***

WARNING: ***For combustible dust applications power shall not be restored after the enclosure has been opened; until combustible dust accumulations within the enclosure have been removed.***

Section 2

Specifications

Features and Certifications
Certified for installation and use in ATEX, IECEx and CE Marked for Type X – Purge, II 2 G Ex e mb ib [px] IIC T4 Gb, Zone 1 gas hazardous areas Type X - Purge, II 2 D Ex tb IIIC T119°C Db IP66, Zone 1 dust hazardous areas ATEX Certification Number = DNV 09 ATEX 48607X IECEx Certification Number = IECEx DNV 09.0001X Standards = IEC / EN 60079-0, IEC / EN 60079-2, IEC / EN 60079-7, IEC / EN 60079-11, IEC / EN 60079-18 and IEC / EN 60079-31
Certified for installation and use in CEC, NEC and NFPA for Type X – Purge, Class I, Division 1, Group B, C & D, T4, Division 1 gas hazardous areas Type X – Purge, Class II, Division 1, Group E, F & G, T4, Division 1 dust hazardous areas
Monitors purge pressure(s), exhaust flow(s), and controls electrical power to one, two, or three pressurized enclosure(s)
Programmable pre-purge dilution time 1 to 99 minutes

Normal Operating Conditions	
Power	Automatically applied to the electrical equipment within the enclosure being monitored by purge & pressurization controller.
Minimum Purge Cycle Time Before Electrical Equipment can Safely be Energized	***Typically,*** purge cycle time is to ensure that at least four (4) times for Division or five (5) times for Zone; the volume of free space in the enclosure of protective gas supply is exchanged before power is connected to the pressurized protected electrical equipment. Ten (10) times volumes for motors, generators and other rotating electrical machinery. ***The number of exchanged volumes may be higher in some situations.***
Enclosure Minimum Overpressure	Green indicator light remains on to show minimum overpressure being maintained above 0.30 inch H_2O (0.75 mbar) for explosive gas atmospheres or 0.50 inch H_2O (1.25 mbar) for combustible dust atmospheres, in electronics enclosure being monitored. ***To help avoid Purge Indicator pressure switch damage; maximum protective gas overpressure inside enclosure should never be more than 4 psig (0.27 bar).***
Mounting Orientation	Controller can be mounted on top, bottom, left or right side of enclosure. Protective Gas Inlet Kit can be mounted on top, bottom or sides of enclosure. Exhaust Vent(s) can be mounted vertical on top or sides of enclosure. ***(Provided there is ease of viewing LED indication, ease of pressure / flow adjustment and there is adequate venting of enclosure.)***

Utility Requirements	
Minimum Protective Gas Supply Pressure to Pressure Regulator	20 psig (1.4 Bar) minimum ***(Suggested, to compensate for enclosure leak rate)***
Maximum Protective Gas Supply Pressure to Pressure Regulator	150 psig (10.3 Bar) maximum ***(Certification maximum pressure rating.)***
Protective Gas Supply Quality	Water and oil-free, - 40° F (- 40° C) dew point, particles ≤ 5µ, ISA grade hydrocarbon-free
Power Control Capability	115VAC, 50/60 Hz, switches up to 25 Amps RSM 230VAC, 50/60 Hz, switches up to 12.5 Amps RSM
Power Input / Consumption	2 Watts maximum
Supply Voltage to TRYCLOPS X – Purge Controller	115VAC model (85VAC to 160VAC) 47 to 63 Hz 230VAC model (130VAC to 265VAC) 47 to 63 Hz
TRYCLOPS X – Purge Controller, Alarm Maximum Continuous Load Contact Rating	150 mA rms AC 150 mA DC
Mains Supply Fluctuation	Not to Exceed 10%
Over Voltage Category	II IEC 606364-4-443

Environmental Conditions	
Operating Temperature Range	- 40°F to 150°F (- 40°C to 65°C)
Storage Temperature Range	- 58°F to 167°F (- 50°C to 75°C)
Used and Mounted	For Indoor and Outdoor Use

Enclosure Material Specifications	
Anodized Aluminum, Weight	29.72 lbs. (13.48 kg)
316 Stainless Steel, Weight	70.07 lbs. (31.78 kg)
Anodized Aluminum Protection	NEMA 4, (IP66)
316 Stainless Steel	NEMA 4X, (IP66)

NOTE: ***Purge Solutions, Inc. is NOT responsible for any misuse or improper installation of product, assumes no liability for special or consequential damages caused by use or misuse or improper installation of its products sold and assumes no liability for injury from use or misuse or improper installation of its products or attached products.***

WARNING: ***Do not overpressure enclosure as this could damage or change factory setting of TRYCLOPS X – Purge Controller, XP Version pressure switch. Pressure switch proof pressure is 4 psi (0.27 bar).***

TRYCLOPS X – Purge Controller, XP Version Model Number Matrix

PST- 1 2 S 2

Purge Solutions, Inc.
TRYCLOPS X - Purge Controller, XP Version

ENCLOSURES MONITORED
1 Enclosure
2 Enclosures
3 Enclosures

VOLTAGE
1 = 115 VAC
2 = 230 VAC

MATERIAL
A = Anodized Aluminum
S = 316 Stainless Steel

MAXIMUM ENCLOSURE VOLUME
1 = Up to 15 Cubic Feet (425 Liters)
2 = Up to 75 Cubic Feet (2,125 Liters)
3 = Up to 200 Cubic Feet (5,663 Liters)

HAZARDOUS LOCATION
G = Explosive Gas Atmosphere
Standard Leave Blank
D = Combustible Dust Atmosphere

ALARM CONTACT
O = Normally Open "NO"
Standard Leave Blank
X = Normally Closed "NC"

NOTE: ***Enclosures Monitored, Voltage, Material, Maximum Enclosure Volume, Hazardous Location and Alarm Contact; selections are made by end user to meet final purge and pressurization application requirements (MODEL NUMBER SHOWN ABOVE IS AN EXAMPLE).***

Section 3

Introduction

Description:

Type X purging reduces the classification within a protected electronics enclosure from Division 1 / Zone 1 to non-hazardous. The TRYCLOPS X – Purge Controller, XP Version is used to provide safe control and monitoring of electrical equipment in Division 1 and Zone 1 hazardous areas. To prevent the possibility of fire or explosion inside the enclosure(s) of energized electrical equipment, a protective gas supply is used to dilute potentially flammable materials to an acceptable level, creating a safe area for the electrical equipment within the enclosure(s). Positive pressure prevents the ingress of flammable materials in the surrounding atmosphere from entering into the enclosure(s), as long as positive pressure is maintained. After the electronics enclosure(s) is purged, power may be automatically applied to the protected electrical equipment.

The TRYCLOPS X – Purge Controller, XP Version provides an objective evidence of the presence of adequate positive purge pressure within the electrical equipment enclosure(s) and the enclosures exhaust port(s) flow of up to three separate enclosure(s). When the monitored electronics enclosure(s) registers a pressure of at least 0.30 inch H2O (0.75 mbar) for explosive gas hazardous areas, 0.50 inch H2O (1.25 mbar) for combustible dust hazardous areas above the reference atmospheric pressure and the exhaust port(s) is registering proper flow, TRYCLOPS X – Purge Controller, XP Version green indicator light will begin blinking. An automatic controlled dilution time cycle, set by the user, may then begin. Typically, a minimum dilution time cycle is specified to ensure that at least five (5) times the volume of free space in the largest enclosure is exchanged before power is automatically applied by TRYCLOPS X – Purge Controller, XP Version to the electrical equipment. ***(The number of exchanged volumes may be higher in some situations)***. After the automatic dilution time cycle has elapsed, the green indicator will stop blinking and go to a continuous green state. Indicating that the monitored enclosure pressure(s) is being maintained above 0.30 inch H2O (0.75 mbar) for explosive gas hazardous areas, 0.50 inch H2O (1.25 mbar) for combustible dust hazardous areas and enclosure exhaust port is registering proper flow(s); power will then be automatically applied by the TRYCLOPS X – Purge Controller, XP Version to the electrical equipment within the protected purged enclosure(s).

The TRYCLOPS X – Purge Controller, XP Version uses two different purge methods to dilute the electronics enclosure(s) and maintain at least 0.30 inch H2O (0.75 mbar) for explosive gas hazardous areas, 0.50 inch H2O (1.25 mbar) for combustible dust hazardous areas; continuous dilution and leakage compensation. Continuous dilution is a method of maintaining pressure in an electronics enclosure(s) in which after the electronics enclosure(s) has been diluted below the required lower explosive limit (LEL) the protective gas is passed continuously through the electronics enclosure(s) at a pressure above that of the required 0.30 inch H2O (0.75 mbar) for explosive gas hazardous areas, 0.50 inch H2O (1.25 mbar) for combustible dust hazardous areas and discharged to the outside atmosphere through an exhaust vent(s). The same volume of

purge gas is maintained during and after the automatic dilution time cycle. Continuous dilution is normally used for maintaining and controlling heat buildup from the electronics within the pressurized electronics enclosure(s) by continuously exchanging purge gas through the enclosure(s) to atmosphere.

Purge Solutions, Inc. offers three sizes of continuous dilution models a Small Continuous Dilution Purge Gas Inlet Kit for enclosures with a volume up to 15 cubic feet (425 liters), a Medium Continuous Dilution Purge Gas Inlet Kit for enclosures with a volume up to 75 cubic feet (2,125 liters) and a Large Continuous Dilution Purge Gas Inlet Kit for enclosures with volumes up to 200 cubic feet (5,663 liters). All Small, Medium and Large Continuous Dilution Purge Gas Inlet Kits are available in materials of anodized aluminum or 316 stainless steel.

The second purge method offered by Purge Solutions, Inc. leakage compensation which allows a higher volume of protective gas supply to be automatically selected to speed up dilution time of potentially flammable materials to an acceptable level, permitting a more-rapid application of initial power, or restoration of power to protected electrical equipment, after service. Leakage compensation is normally used to conserve purge gas when utilities are at a premium.

When using an Automatic Leakage Compensation Purge Gas Inlet Kit during the dilution time cycle power will be connected to a normally closed solenoid valve opening it and allowing a higher volume of purge gas into the enclosure being diluted. When the dilution time cycle has elapsed, the large volume of purge gas will be automatically turned off by disconnecting power to the normally closed solenoid valve through the TRYCLOPS X – Purge Controller, XP Version. At this time a volume of purge gas larger than the leak rate of the enclosure will be introduced into the now protected enclosure to maintain at least 0.30 inch H2O (0.75 mbar) for explosive gas hazardous areas, 0.50 inch H2O (1.25 mbar) for combustible dust hazardous areas. Purge Solutions offers three sizes of Automatic Leakage Compensation Purge Gas Inlet Kit models. A Small Automatic Leakage Compensation Purge Gas Inlet Kit for enclosures with a volume up to 15 cubic feet (425 liters), a Medium Automatic Leakage Compensation Purge Gas Inlet Kit for enclosures with a volume up to 75 cubic feet (2,125 liters) and a Large Automatic Leakage Compensation Purge Gas Inlet Kit for enclosures with volumes up to 200 cubic feet (5,663 liters). All Small, Medium and Large Automatic Leakage Compensation Purge Gas Inlet Kits are available in materials of anodized aluminum or 316 stainless steel.

For installations that require a back-up pressure relief vent for the purged enclosure, Purge Solutions, Inc. offers three sizes of back-up pressure relief vent kits. A Small Back-Up Vent for enclosures with a volume up to 15 cubic feet (425 liters), a Medium Back-Up Vent for enclosures with volumes up to 75 cubic feet (2,125 liters) and a Large Back-Up Vent for enclosures with volumes up to 200 cubic feet (5,663 liters). All Back-Up Vents are constructed of 316 stainless steel with an option of mounting on the top or side of an enclosure.

For purged electronic enclosure(s) monitored by the TRYCLOPS X – Purge Controller, XP Version, which has electrical components with higher surface temperatures than the temperature class of the hazardous area in which the electrical equipment is located, Purge Solutions, Inc. offers a Back-Up Purge Gas Kit, which is used in the event that the initial protective gas supply is lost, a back-up source of protective gas is automatically applied to the protected enclosure(s). Electrical equipment protected with this feature is allowed to cool adequately, while preventing the ingress of flammable

materials in the surrounding atmosphere from entering into the enclosure as long as positive pressure is maintained.

For purged enclosure(s) using the Back-Up Purge Gas Kits, a Protective Gas Loss Indicator can be installed for remote protective gas purge supply monitoring. By installing one Protective Gas Loss Indicator on the initial protective gas purge supply line, an alarm signal can be sent if the initial protective gas purge supply has been lost. A second Protective Gas Loss Indicator installed on the protective back-up purge gas supply line will send an alarm signal if the protective back-up purge gas supply has been depleted, as might be the case when bottled gas is used as a back-up gas source.

***WARNING:* Failure to heed the following information may lead to injury of personnel or equipment damage.**

***CAUTION:* Electrical equipment components may be hot even when power is not applied. Take appropriate precautions to prevent injury from contact with hot items.**

***WARNING:* Failure to allow adequate cooling of electrical equipment components with hot surfaces before opening the purged enclosure(s) can lead to injury of personnel or equipment damage.**

For applications where thermal management of electrical cabinets and control panels are required; Purge Solutions, Inc. offers Vortex Cabinet Cooler Systems, which provide cooling capacities for your application and maintain a NEMA 4 or 4X (IP66) rating for installation and use in hazardous area. Contact your local Purge Solutions, Inc. representative or the factory for sizing of system and installation information.

***NOTE:* There are special modifications and sizing requirements to be made before Vortex Cabinet Coolers are able to be installed and used in a hazardous area.**

***NOTE:* In the interest of completeness, included with the TRYCLOPS X – Purge Controller, XP Version is additional information pertaining to options not included with your equipment.**

For purged and / or increased safety enclosure that require viewing of components mounted within the enclosure Purge Solutions, Inc. offers Increased Safety Window Kits in 5 different window viewing sizes with bezels available in anodized aluminum or 316 stainless steel.

Purge Solutions, Inc. Standard Terms and Conditions of Sale

The product, equipment, software, material and / or services (collectively the "Product"), which are described in our quotation, purchase order acknowledgment, packing list and / or invoice hereof shall be sold by Purge Solutions, Inc. only upon the following Standard Terms and Conditions of Sale:

1. CONTRACT TERMS AND ACCEPTANCE OF PURCHASE ORDER: These Standard Terms and Conditions of Sale (the "Contract") are the only terms and conditions applicable to the sale of the Products, which are based on qualification and completion of the following: a) Acceptance of any Purchase Order is subject to credit approval by Purge Solutions, Inc. b) Acceptance of completed Purge Solutions, Inc. Customer Information Form. c) Final acceptance of Purchase Order will be Purchase Order Acknowledgment being forwarded to Buyer *(Only until Purchase Order Acknowledgment has been forwarded to Buyer has purchase order been accepted and sent to manufacturing for processing.)*

2. QUOTATION PRICES: Quoted prices are valid for thirty (30) days of quotation date and are exclusive of any applicable taxes, shipping charges and / or any other miscellaneous charges not specified in quote. Prices are subject to change without notice. Any change in quantities, partial release and / or destination may incur a price adjustment.

3. PAYMENT TERMS: Purchase Orders inside the Continental United States; are subject to the approval of Purge Solutions, Inc. Credit Department and unless otherwise agreed in writing, terms of payment are NET thirty (30) days following the date of invoice. Purchase orders outside the continental United States, will be shipped upon receipt of full payment and all costing in US dollars. When the purchase order has been acknowledged, an invoice will be provided. When full payment has been received, including shipping and handling charges, purchase order will be shipped. Purge Solutions, Inc. accepts Visa, MasterCard, Discover and American Express as well as banking transfers. Banking transfer fees are not shared and if banking transfer fees are incorrect; purchase orders will not be shipped. If any Buyer fails to comply with these terms and conditions or sale or if Buyer's credit becomes unsatisfactory to Purge Solutions, Inc., Purge Solutions, Inc. reserves the right to terminate the purchase order without liability to Purge Solutions, Inc. and all future purchase orders of Buyer will be COD or credit card terms before shipping. If a company has an outstanding invoice that is five (5) days past the due date, open purchase orders are subject to being held until such time as the past due status has been brought current.

4. DELIVERY DATES: Quoted delivery dates are approximate estimates determined at the time of quotation and are subject to revisions due to variations in order processing and new purchase orders in manufacturing queue since quoting. Purge Solutions, Inc. assumes no liability for losses arising from inaccurate lead time estimates and is able to make partial shipments against this Contract. The Buyer shall not hold Purge Solutions, Inc. responsible for any delay or damages suffered by the Buyer by reason of any delay due to fires, strikes, riots, Acts of God, priorities, Government orders or restrictions, delays by suppliers or materials or parts, inability to obtain suitable and sufficient labor and / or any other unavoidable contingencies beyond the control of Purge Solutions, Inc. In no case shall Purge Solutions, Inc. be liable for any consequential or special damages arising from any delay in delivery. In the event of such delay, the shipping date shall be extended for a period equal to the time lost by reason of such delay.

5. CANCELLATIONS: Only prior to shipping of Product may Buyer terminate purchase order providing the following: a) Purge Solutions, Inc. is given reasonable notice. b) Purge Solutions, Inc. is compensated for all costs, expenses incurred or committed and for any losses resulting. Once a purchase order has been shipped, all sales are final.

6. CLAIMS, DAMAGE OR LOSS IN TRANSIT: Delivery of Product to carrier from Purge Solutions, Inc. facility or other shipping point shall constitute delivery. Buyer shall bear the risk of loss for damage to or loss of Product from the time Purge Solutions, Inc. delivers Product to carrier, Buyer or Buyer agent. Any claims for damage or loss, which has passed to the Buyer shall be filed with the carrier. Buyer shall give written notice to Purge Solutions, Inc. of any claim for shortage or error in Product shipped within five (5) days of receipt of Product.

7. WARRENTY AND LIMITATION OF LIABILITY: Purge Solutions, Inc. Products are warranted free from defects in material and workmanship at the time of shipment for one year thereafter (One year from date of shipping.). Any claimed defects with Purge Solutions, Inc. Products must be reported within the warranty period and warranty subject to inspection by Purge Solutions, Inc. All warranty inspections are to be performed at Purge Solutions, Inc. facility. Buyer shall ship with shipping charges paid by the Buyer to Purge Solutions, Inc. facility. After inspection by Purge Solutions, Inc. a quotation of proposed work required will be sent to the Buyer. Purge Solutions, Inc. shall be liable only to replace or repair, at its option, free of charge, Products which are found by Purge Solutions, Inc. to be defective in material or workmanship, and which are reported to Purge Solutions, Inc. within the warranty period as provide previously. This right of replacement shall be Buyer's exclusive remedy against Purge Solutions, Inc. Shipment of repaired or replaced products from Purge Solutions, Inc. facility shall be ex-works or FOB Purge Solutions, Inc. facility. Purge Solutions, Inc. shall not be liable for labor charges or other losses or damages of any kind or description, including but not limited to, incidental, special or consequential damages caused by defective Products. This warranty shall be void if product specifications provided by Purge Solutions, Inc. are not followed concerning methods of installation, operation, usage, storage or exposure to harsh conditions (including, but not limited to, temperature and humidity levels outside the approved ranges). Products furnished by Purge Solutions, Inc. by other suppliers shall carry no warranty except that supplier's warranties as to materials and workmanship. Purge Solutions, Inc. disclaims all warranties, expressed or implied, with respect to such Products. The express warranties set forth herein constitute the only warranties with respect to the products sold in connection herewith. Purge Solutions, Inc. makes no representation or warranty of any kind, express or implied (either in fact or by operation of law), with respect to the Products, whether as to their merchantability, fitness for a particular purpose or otherwise. No employee, agent or representative of Purge Solutions, Inc. has any authority to bind Purge Solutions, Inc. to any oral or written representation or warranty concerning the Products over and above that stated herein, except by written amendment signed by Purge Solutions, Inc. and Buyer.

8. RETURNS: Subject to the terms of this Contract regarding CANCELLATION and WARRANTY, All sales are final. Buyer may request a warranty return by contacting Purge Solutions, Inc. and requesting a Return Merchandise Authorization Number. No Product will be accepted for return without a valid Return Merchandise Authorization form and clearly noted on the outside of the shipment. Any return shipment must be made by prepaid freight unless Purge Solutions, Inc. has expressly authorized Buyer in writing to ship such Product to Purge Solutions, Inc. at Purge Solutions, Inc. expense. Any returns of Product authorized by Purge Solutions, Inc. under certain circumstances are subject to a standard restocking charge of 25% of the purchase order's invoice. Non-stock Products are subject to higher restocking charges, if return privileges are extended.

9. SERVICES: Services rendered by Purge Solutions, Inc. whether with or without charge, are only advisory in nature and are only merely incidental to the sales of the Product. When any such services are rendered, Buyer will retain full responsibility for and full control, custody and supervision of the Product, its installation, selection thereof and a representative of Buyer shall be present with full authority to direct operations.

Section 4

Installation

WARNING: ***Before attempting to install the TRYCLOPS X – Purge Controller, XP Version, review all the material and all safety information in this manual and all other applicable documents.***

WARNING: ***Applicable permits must be obtained and appropriate precautions must be taken to prevent possible injury to personnel or equipment damage when installing the TRYCLOPS X – Purge Controller, XP Version.***

NOTE: ***Refer to all ATEX, CEC, IECEx, NEC and NFPA certificates for any Special Conditions of Use. If the sign "X" is placed after the certificate number, it indicates that the equipment or protective system is subject to special conditions for safe use specified in the schedule of the certificate.***

CAUTION: ***This product is heavy. Care must be taken at all times to avoid injury. Never attempt to move or install this product without help or lifting gear.***

Mounting:

Review all of the material in this manual prior to installing and interfacing the TRYCLOPS X – Purge Controller, XP Version to the enclosure(s) it will be monitoring. If you have any questions, please contact your local Purge Solutions, Inc. representative or the factory (refer to Getting Help page 88). For installing the TRYCLOPS X – Purge Controller, XP Version to enclosure(s) and for attaching and routing wires for power and alarm signals, refer to Installation Flow Diagram drawings (refer to page 66), Purge Exhaust Vent Assembly / configuration drawings (refer to page 70), Installation General Assembly drawing (refer to page 79) and Wiring Diagrams drawings (refer to page 82).

Step 1:

Make sure that area surrounding the enclosure(s) to be monitored by the TRYCLOPS X – Purge Controller, XP Version is known to be non-hazardous.

Step 2:

Make sure that all power is removed from the electrical equipment located in the enclosure(s) where the TRYCLOPS X – Purge Controller, XP Version will be installed.

Step 3:

Choose a mounting location for the TRYCLOPS X – Purge Controller, XP Version as near the enclosure(s) to be monitored as possible in a location farthest from the protective supply gas inlet, refer to Installation Flow Diagrams (drawing numbers DO-30015-E-1 through 4, page 66). The chosen location should permit adequate viewing of the TRYCLOPS X – Purge Controller, XP Version indicator lights and interfacing enclosure pressure monitoring port and exhaust vent flow.

Step 4:

Use Installation General Assembly (drawing number DO-40014-D, page 79) to create a mounting hole template this will help to accurately locate the mounting holes. Use the dimensions from the Installation General Assembly drawings to draw and a 1 to 1 scale drawing. The required hole locations can then be transferred and / or marked using the centers of the holes as shown on the 1 to 1 drawing.

Step 5:

Drill or punch all holes, per the sizes specified on the Installation General Assembly drawings number DO-40014-D, page 79.

Step 6:

After TRYCLOPS X – Purge Controller, XP Version has been mounted, install exhaust vent on enclosure nearest to TRYCLOPS X – Purge Controller, XP Version for ease of tubing and a location farthest from the protective supply gas inlet, refer to Installation Flow Diagrams (drawing numbers DO-30015-E-1 through 4, page 66). ***(This step must be repeated for every enclosure being monitored.)***

Step 7:

After all exhaust vents been properly installed, run 1/4 inch outer diameter tubing from the exhaust flow port of the TRYCLOPS X – Purge Controller, XP Version to the enclosure exhaust vent. ***(This step must be repeated for every enclosure being monitored.)***

Step 8:

After all tubing has been properly ran to all exhaust vents, install fitting in enclosure that will except a 1/4 inch outer diameter tube, which must be ran from the enclosure pressure sensor port of the TRYCLOPS X – Purge Controller, XP Version to the newly installed enclosure monitoring pressure port, refer to Installation Flow Diagrams (drawing numbers DO-30015-E-1 through 4, page 66). ***(This step must be repeated for every enclosure being monitored.)***

Step 9:

After all tubing has been properly ran to all pressure ports and exhaust vents; install properly rated cable connection in the 1/2 -14 FNPT holes located on the bottom of the TRYCLOPS X – Purge Controller, XP Version. Plug any 1/2 -14 FNPT holes not used with properly certified plugs rated for hazardous area location.

WARNING: ***Poured seals, conduit, cable glands, cable and hole plugs should not be installed in a hazardous area classification for which it is not rated.***

NOTE: ***For Division 1 installations conduit must be sealed within 18 inches of TRYCLOPS X – Purge Controller, XP Version housing. All cable entries in TRYCLOPS X – Purge Controller, XP Version housing are 1/2-14 NPT. When selecting enclosure(s) TRYCLOPS X – Purge Controller, XP Version will be installed insure that there is enough space available for poured seals and associated conduit bringing power and alarm wire to and from TRYCLOPS X – Purge Controller, XP Version.***

NOTE: ***For Zone 1 installations cable must be sealed at TRYCLOPS X – Purge Controller, XP Version housing. All cable entries in TRYCLOPS X – Purge Controller, XP Version housing are 1/2-14 NPT. When selecting enclosure(s) TRYCLOPS X – Purge Controller, XP Version will be installed insure that there is enough space available for cable glands and associated cable bringing power and alarm wire to and from TRYCLOPS X – Purge Controller, XP Version.***

Step 10:

Connect three-conductor power cable (refer to Power Source Specifications page 18) for power to the TRYCLOPS X – Purge Controller, XP Version. Use Wiring Diagram drawing number DO-30038-G, (page 82) for 115VAC unit wire terminal strip locations and DO-30039-G, (page 83) for 230VAC unit wire terminal strip locations.

CAUTION: ***This apparatus must be earth grounded. Refer to Figure 1 for proper ground connection detail.***

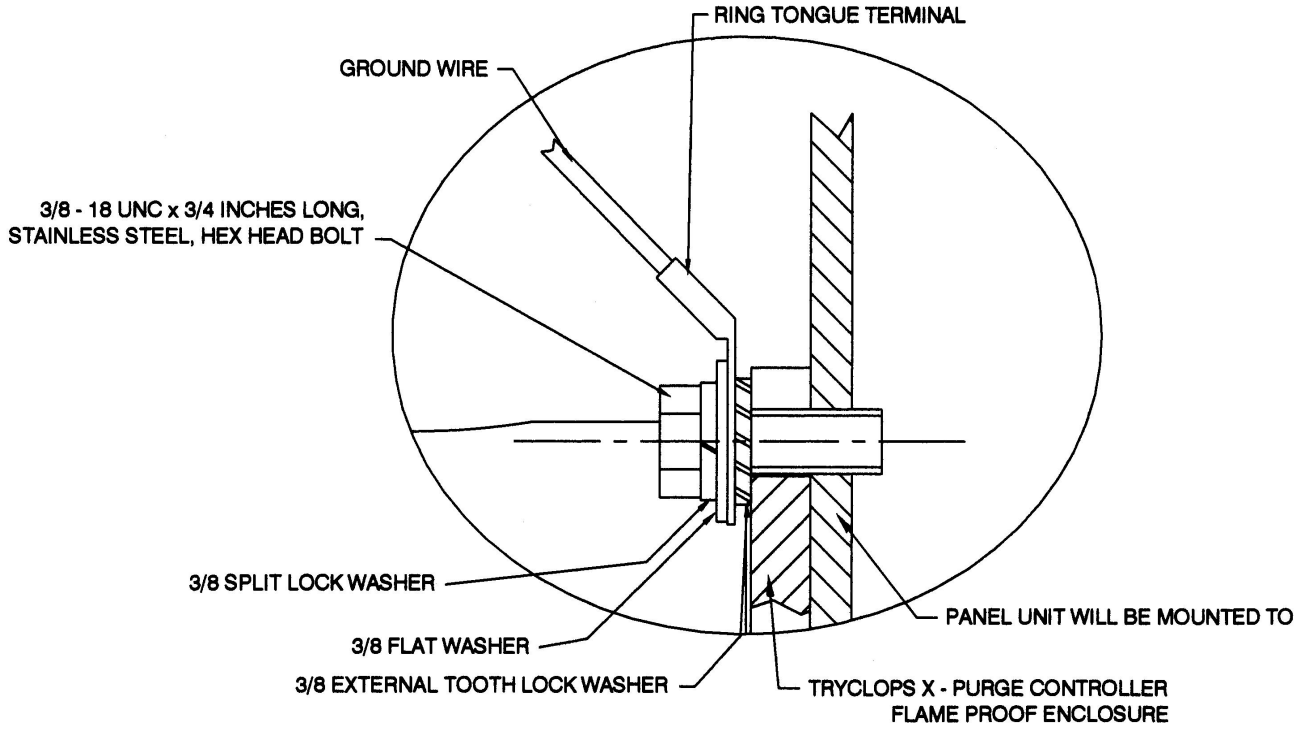

DETAIL OF GROUND CONNECTION

Figure 1

CAUTION: ***Electrical power wiring must be checked for correct size and routing.***

Step 11:

Connect three-conductor power cable (refer to Power Source Specifications page 18) for power from the TRYCLOPS X – Purge Controller to the electrical equipment in the enclosure(s) to be monitored and controlled. Use Wiring Diagram drawing number DO-30038-G, (page 82) for 115VAC unit wire terminal strip locations and DO-30039-G, (page 83) for 230VAC unit wire terminal strip locations.

Step 12:

Run 20 AWG, two-conductor wire (refer to Power Source Specifications page 18) for alarm signals to the TRYCLOPS X – Purge Controller. Use Wiring Diagram drawing number DO-30038-G, (page 82) for 115VAC unit wire terminal strip locations and DO-30039-G, (page 83) for 230VAC unit wire terminal strip locations.

Step 13:

If applicable, run up to 10 AWG, two-conductor cable (refer to Power Source Specifications page 18) for Automatic Leakage Compensation Purge Gas Inlet Kit solenoid valve to the TRYCLOPS X – Purge Controller, XP Version. Use Wiring Diagram drawing number DO-30038-G, (page 82) for 115VAC unit wire terminal strip locations and DO-30039-G, (page 83) for 230VAC unit wire terminal strip locations.

WARNING: ***If Purge Solutions, Inc. Automatic Leakage Compensation Purge Gas Inlet Kit and associated solenoid valve is not used, plug remaining hole in TRYCLOPS X – Purge Controller, XP Version housing with 1/2 - 14 FNPT plug. Plugs should not be installed in a hazardous area classification for which it is not rated.***

Step 14:

After routing and terminating the wires into the terminal strips within the TRYCLOPS X – Purge Controller, XP Version secure all wires using proper lead dress.

Step 15:

After wires have been properly dressed, set automatic dilution time delay to ensure that at least five (5) times the volume of free space in the largest enclosure is exchanged before power is automatically applied to the electrical equipment. ***(Refer to Startup Procedure(s) for proper steps to set automatic dilution time cycle.)***

NOTE: ***The number of exchanged volumes and times may be higher in some situations.***

Step 16:

After automatic time delay has been set, screw cover tightly onto TRYCLOPS X – Purge Controller, XP Version enclosure.

Step 17:

After cover has been screwed on tightly to the TRYCLOPS X – Purge Controller, XP Version enclosure, install the cover-retaining clip.

Electrical Power Installation:

***NOTE**: Refer to Power Source Specifications, Power Connection table, and Wiring Diagram numbers DO-30038-G, page 82 for 115VAC unit and DO-30039-G, page 83 for 230VAC unit for connecting power to and from the TRYCLOPS X – Purge Controller, XP Version.*

Power Source Specifications
115 Volt Model: 85 to 160 VAC, 47 to 63 Hz 230 Volt Model: 130 to 265 VAC, 47 to 63 Hz
Use up to 10 AWG stranded, 3 conductor copper or tin-plated copper power wire rated for at least 600 VAC, of the required length.

***WARNING:** This apparatus must be earth grounded! Refer to Figure 1 for proper ground connection details.*

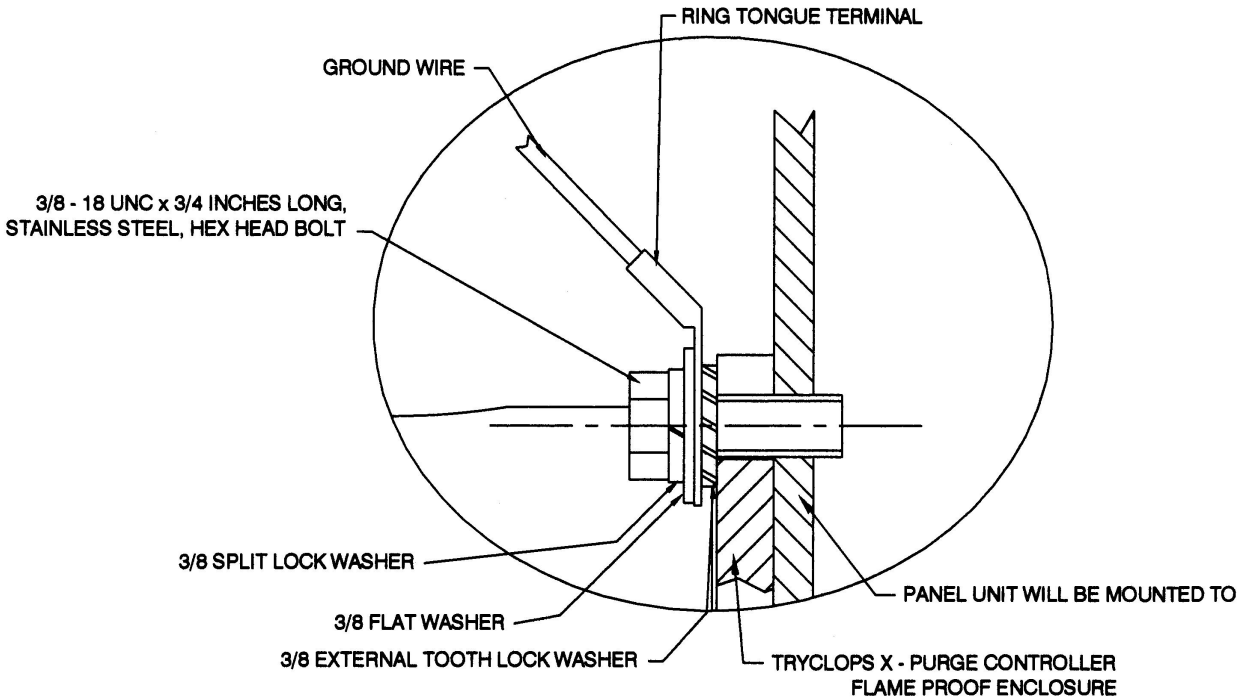

DETAIL OF GROUND CONNECTION

Figure 1

***CAUTION:** Electrical power must be free of spikes, sags, surges, or electrical noise.*

♪ ***NOTE:*** ***The solid state switches used in Purge Solutions TRYCLOPS - X Purge Controllers, XP Version have a small leakage current of less than one milliamp. This may be noticed if no load is connected across the switch. With no load a high impedance voltmeter will always show near the line voltage present at the switched output. When a load is connected this will appear as expected. If needed a 15,000 ohm resistor can be connected as a load. This should be rated at 5 watts for 115v lines and 10 watts for 230v lines. This resistor may be required for systems with a light load. This will be seen as a chattering or always on condition. If this occurs install the above resistor in parallel with the load.***

Power Connection To Purge Controller	
WIRE	**TERMINAL NUMBER**
Hot 1 or + Supply	Terminal Block - 1 Position - 1
Neutral or Hot 2 Or Return	Terminal Block - 1 Position - 2
Ground, Earth, or Chassis	Terminal Block - 1 Position - 3

Power Connection From Purge Controller To Electrical Equipment in Protected Enclosure(s)	
WIRE	**TERMINAL NUMBER**
Hot 1 or + Supply	Terminal Block - 1 Position - 4
Neutral or Hot 2 Or Return	Terminal Block - 1 Position - 5
Ground, Earth, or Chassis	Terminal Block - 1 Position - 6

Power Connection From Purge Controller To Automatic Leakage Compensation Air Inlet Kit Solenoid Valve	
WIRE	**TERMINAL NUMBER**
Hot 1 or + Supply	Terminal Block - 1 Position - 7
Neutral or Hot 2 Or Return	Terminal Block - 1 Position - 8
Ground, Earth, or Chassis	Terminal Block - 1 Position - 9

Alarm Signal Installation:

NOTE: ***The TRYCLOPS X – Purge Controller, XP Version provides dry alarm contact(s) for use by the customer. For hook-up and use the alarm contact(s) provided by the purge controller, consult the following Alarm Source Specifications, Alarm Connection table, and Wiring Diagram drawing numbers DO-30038-G, page 82 for 115VAC unit and DO-30039-G, page 83 for 230VAC unit.***

Alarm Source Specifications
Alarm Contact is rated for 265V AC/DC, 150mA max.
Use 20 AWG two conductor copper or tin-plated copper power wire rated for at least 300 V at the required length.

Alarm Connections	
ALARM TERMINAL	**TERMINAL NUMBER**
Loss of Purge Pressure: Open on Alarm (Standard). Closed on Alarm (Optional). Closed (Standard) Open (Optional) when pressure in enclosure being monitored is at or above 0.30 inch H2O (0.75 mbar) for explosive gas hazardous areas, 0.50 inch H2O (1.25 mbar) for combustible dust hazardous areas	Terminal Block – 2 Position –1
Return for position one	Terminal Block – 2 Position – 2
Loss of Exhaust Flow: Open on Alarm (Standard). Closed on Alarm (Optional). Closed (Standard) Open (Optional) when flow of exhaust for enclosure being monitored has fallen below a safe level.	Terminal Block – 2 Position – 3
Return for position three	Terminal Block – 2 Position – 4
Maintenance Alarm and By-Pass Mode: Open on Alarm (Standard). Closed on Alarm (Optional). Open (Standard) Closed (Optional) when maintenance switch or by-pass switch is operated.	Terminal Block – 2 Position – 5
Return for position five	Terminal Block – 2 Position – 6

(*Normal Operation Mode*) Alarm Matrix			
ALARM	**VISUAL INDICATION**	**REMOTE INDICATION**	**POWER DISCONNECTED**
Purge pressure goes below 0.30 inch H2O (0.75 mbar) for explosive gas hazardous areas, 0.50 inch H2O (1.25 mbar) for combustible dust hazardous areas	Steady State, Red LED	Yes, when installed	Yes
Exhaust vent flow drops below safe level	Steady State, Red LED	Yes, when installed	Yes
Maintenance Switch turned to Over-Ride	Blinking, Red LED	Yes, when installed	No
During Purge Dilution Cycle Time	Blinking, Green LED	No	Yes
Normal Operation	Steady State, Green LED	No	No

(*Power Disconnect By-Pass Switch Mode*) Alarm Matrix			
ALARM	**VISUAL INDICATION**	**REMOTE INDICATION**	**POWER DISCONNECTED**
Purge pressure goes below 0.30 inch H2O (0.75 mbar) for explosive gas hazardous areas, 0.50 inch H2O (1.25 mbar) for combustible dust hazardous areas	Steady State, Red LED	Yes, when installed	No
Exhaust vent flow drops below safe level	Steady State, Red LED	Yes, when installed	No
Maintenance Switch turned to Over-Ride	Blinking, Red LED	Yes, when installed	No
During Purge Dilution Cycle Time	Blinking, Green LED	No	Yes
Normal Operation	Steady State, Green and Blinking Red LED.	Yes, when installed	No

Section 5

Start Up Procedures

(*Normal Operation Mode*) Continuous Dilution Initial Startup Procedure:

The following procedure should be performed when initially starting up a system in ***Normal Operation Mode*** using a Continuous Dilution Purge Gas Kit and to calculate the dilution time for any purged electrical equipment that uses the TRYCLOPS X – Purge Controller, XP Version to monitor and control the electrical equipment enclosure(s) purge pressure and power.

WARNING: ***Failure to heed the following information may lead to injury of personnel or equipment damage.***

WARNING: ***Do not open the electrical equipment enclosure(s) in a hazardous area even when de-energized unless area has been properly tested and is known to not contain explosive materials.***

WARNING: ***Before initially starting the equipment, electrical power wiring must be checked for correct size and routing.***

WARNING: ***The following procedure only addresses the application of power to the TRYCLOPS X – Purge Controller, XP Version and to the electrical equipment located within the purged enclosure(s) being monitored and controlled by the TRYCLOPS X – Purge Controller, XP Version.***

NOTE: ***Refer to all ATEX, CEC, IECEx, NEC and NFPA certificates for any Special Conditions of Use. If the sign "X" is placed after the certificate number, it indicates that the equipment or protective system is subject to special conditions for safe use specified in the schedule of the certificate.***

Step 1:

Make sure that area surrounding the TRYCLOPS X – Purge Controller, XP Version and the electronics enclosure(s) the TRYCLOPS X – Purge Controller, XP Version will be monitoring and controlling is known to be non-hazardous.

Step 2:

After it has been established that the area surrounding TRYCLOPS X – Purge Controller, XP Version and the electronics enclosure(s) the TRYCLOPS X – Purge Controller, XP Version will be monitoring and controlling is non-hazardous, unscrew the cover off the TRYCLOPS X – Purge Controller, XP Version housing and open all electronics enclosure door(s).

Step 3:

After opening all electronics enclosure door(s), install Continuous Dilution Purge Gas Inlet Kit per installation instructions located in Purge Solutions, Inc. Purge Gas Inlet Kits Users Manual. ***(This step must be repeated for every enclosure being monitored.)***

Step 4:

With all electronics enclosure door(s) still open, turn on purge protective gas supply to electronics enclosure(s) by turning the Continuous Dilution Purge Gas Inlet Kit shutoff valve to the ON position and verify that enclosure is being supplied with purge gas.

Step 5:

After it has been verified that the enclosure is being supplied with purge gas, turn off purge gas supply pressure to electronics enclosure at Continuous Dilution Purge Gas Inlet Kit pressure regulator.

Step 6:

With protective gas supply pressure off at Continuous Dilution Purge Gas Inlet Kit regulator, close and latch electronics enclosure door(s).

Step 7:

With electronics enclosure door(s) properly closed and latched, turn on power to TRYCLOPS X – Purge Controller, XP Version.

WARNING: DO NOT TURN ON POWER TO TRYCLOPS X – PURGE CONTROLLER, XP VERSION, UNLESS AREA HAS BEEN PROPERLY TESTED AND IS KNOWN NOT TO CONTAIN EXPLOSIVE MATERIALS.

Step 8:

With power applied to the TRYCLOPS X – Purge Controller, XP Version, raise the pressure of the purge protective gas using the Continuous Dilution Purge Gas Inlet Kit pressure regulator until TRYCLOPS X – Purge Controller, XP Version green light begins to blink.

Step 9:

With purge protective gas being supplied to electronics enclosure(s) and TRYCLOPS X – Purge Controller, XP Version's green indicator light blinking, turn Continuous Dilution Purge Gas Inlet Kit manifold shut-off valve to the OFF position.

Step 10:

With protective gas supply turned off at Continuous Dilution Purge Gas Inlet Kit shutoff valve, record the pressure reading on the Continuous Dilution Purge Gas Inlet Kit pressure gauge. The recorded pressure will be used to calculate the purge dilution time before power can be applied to electronics within the purged enclosure. ***Only the pressure recorded when the Continuous Dilution Purge Gas Inlet Kit shutoff valve is in the OFF position should be used to calculate the dilution time required before power can be connected to the electronics with in the enclosure.***

Step 11:

With Continuous Dilution Purge Gas Inlet Kit manifold shut-off valve in the OFF position and the pressure reading of the pressure regulator gauge written down, disconnect power from the TRYCLOPS X – Purge Controller, XP Version.

Step 12:

With TRYCLOPS X – Purge Controller, XP Version cover removed, set automatic dilution time cycle in the TRYCLOPS X – Purge Controller, XP Version to ensure that at least five (5) times the volume of free space in the largest electronics enclosure is exchanged before power is automatically applied to the electrical equipment from the TRYCLOPS X – Purge Controller, XP Version. Refer to Figure 2 for location and details of dilution time switches in TRYCLOPS X – Purge Controller, XP Version.

NOTE: ***If you are using one of Purge Solutions, Inc. Continuous Dilution Purge Gas Inlet Kits to supply purge gas to an electronics enclosure the TRYCLOPS X – Purge Controller, XP Version is monitoring refer to Purge Solutions, Inc. web site to use Dilution Time Software to calculate dilution time for your size enclosure. The Dilution Software can only be used if you are using a Purge Solutions, Inc. Continuous Dilution Purge Gas Inlet Kit, as the Dilution Time Software calculations are based data from test performed on Purge Solutions, Inc. Continuous Dilution Purge Gas Inlet Kits and proprietary exhaust vents.***

WARNING: ***The number of exchanged volumes may be higher in some situations.***

CAUTION: ***Do not decrease the timer setting required to adequately dilute the enclosure volume by five (5) times its free space. If timer setting is too short, the electrical equipment enclosure(s) may not be diluted adequately before power is applied. This could result in injury to personnel or equipment damage.***

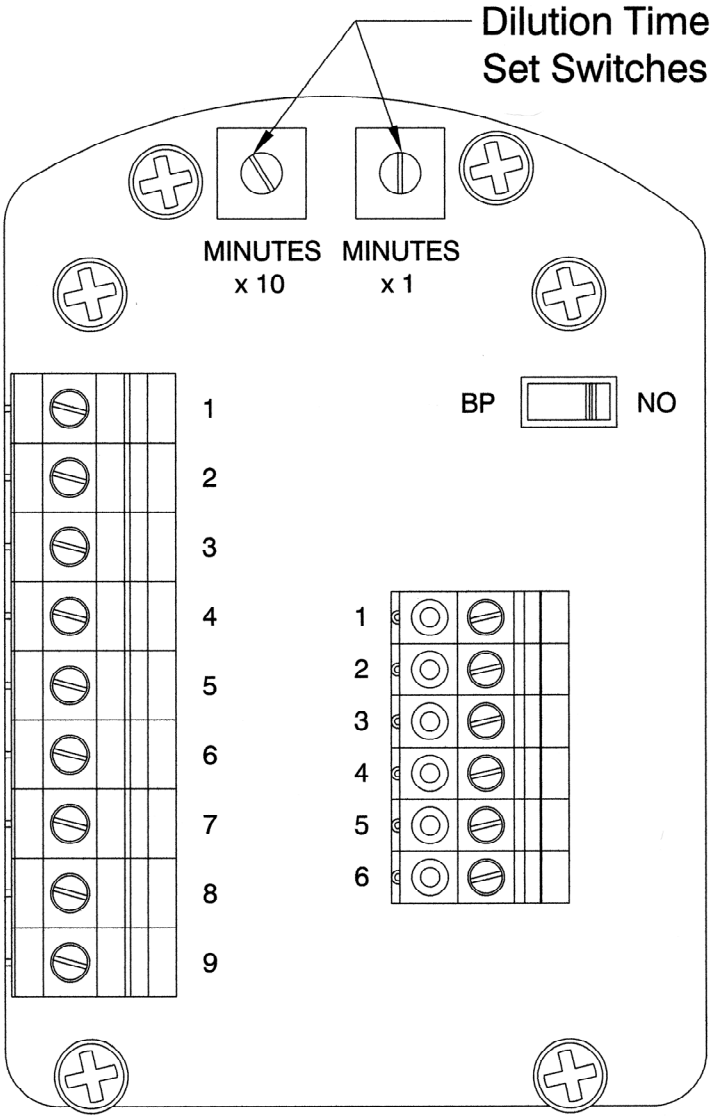

Figure 2

Step 13:

After automatic dilution purge time cycle has been set, screw TRYCLOPS X – Purge Controller, XP Version's cover back on housing and secure cover with retaining clip.

Step 14:

After screwing TRYCLOPS X – Purge Controller, XP Version cover back on housing and secure cover with retaining clip, close and properly latch all enclosure door(s).

Step 15:

With all enclosure door(s) properly closed and latched, turn on power to TRYCLOPS X – Purge Controller, XP Version.

***WARNING:* DO NOT TURN ON POWER TO TRYCLOPS X – PURGE CONTROLLER, XP VERSION, UNLESS AREA HAS BEEN PROPERLY TESTED AND IS KNOWN NOT TO CONTAIN EXPLOSIVE MATERIALS.**

Step 16:

With power applied to the TRYCLOPS X – Purge Controller, XP Version turn the Continuous Dilution Purge Gas Inlet Kit manifold shut-off valve to the ON position and the TRYCLOPS X – Purge Controller, XP Version green light should begin to blink.

Step 17:

With purge protective gas being supplied to electronics enclosure(s) and TRYCLOPS X – Purge Controller, XP Version's green indicator light blinking, the automatic dilution purge time cycle will start. ***The automatic dilution time cycle must be set long enough to ensure that at least five (5) times the volume of free space in the largest enclosure of purge protective gas is exchanged before power can be automatically applied to the electrical equipment inside the purged enclosure(s) by the TRYCLOPS X – Purge Controller, XP Version.***

***WARNING:* The number of exchanged volumes may be higher in some situations.**

***NOTE:* Purge dilution time can be reduced by increasing purge supply gas pressure at Continuous Dilution Purge Gas Inlet Kit pressure regulator. Repeat steps 6 through 17 until satisfactory dilution time has been met.**

Step 18:

After the automatic dilution purge time cycle has elapsed and the following conditions are being met, the monitored enclosure pressure is being maintained above 0.30 inch H2O (0.75 mbar) for explosive gas hazardous areas, 0.50 inch H2O (1.25 mbar) for combustible dust hazardous areas and enclosure exhaust port is registering adequate flow, the green indicator will stop blinking and go into a steady state. Power will then be automatically applied by the TRYCLOPS X – Purge Controller, XP Version to the electrical equipment within the protected purged enclosure.

NOTE: ***If you are using one of Purge Solutions, Inc. Continuous Dilution Purge Gas Inlet Kits to supply purge gas to an electronics enclosure(s) the TRYCLOPS X – Purge Controller, XP Version is monitoring refer to Purge Solutions web site to use Dilution Time Software to calculate dilution time for your largest size enclosure. The Dilution Software can only be used if you are using a Purge Solutions, Inc. Continuous Dilution Purge Gas Inlet Kit, as the Dilution Time Software calculations are based data from test performed on Purge Solutions, Inc. Continuous Dilution Purge Gas Inlet Kits and proprietary vents.***

Step 19:

After the automatic dilution purge time cycle has elapsed and the following conditions are being met, all the monitored enclosure pressure(s) is being maintained above 0.30 inch H2O (0.75 mbar) for explosive gas hazardous areas, 0.50 inch H2O (1.25 mbar) for combustible dust hazardous areas and all enclosure exhaust port is registering adequate flow(s), the green indicator will stop blinking and go into a steady state. Power will then be automatically applied by the TRYCLOPS X – Purge Controller, XP Version to the electrical equipment within the protected purged enclosure(s).

NOTE: ***If AC power, purge pressure(s) becomes less than 0.30 inch H2O (0.75 mbar) for explosive gas hazardous areas, 0.50 inch H2O (1.25 mbar) for combustible dust hazardous areas or exhaust flow(s) drops too low, the TRYCLOPS X – Purge Controller, XP Version shuts off power to the electrical equipment it has been monitoring and controlling. When the power, purge pressure(s) or exhaust flow(s) is restored, the TRYCLOPS X – Purge Controller, XP Version automatically begins the dilution time cycle. After the automatic dilution time cycle has elapsed and the following conditions are being met. The monitored electronics enclosure pressure(s) is being maintained above 0.30 inch H2O (0.75 mbar) for explosive gas hazardous areas, 0.50 inch H2O (1.25 mbar) for combustible dust hazardous areas and enclosure exhaust port is registering adequate flow(s). Power will then be automatically applied by the TRYCLOPS X – Purge Controller, XP Version to the electrical equipment within the protected purged enclosure(s).***

Step 20:

After an automatic dilution time has been established, the automatic purge dilution time, the purge protective gas supply pressure and Continuous Dilution Purge Gas Inlet Kit pressure regulator gauge pressure written down during set up should be recorded for used during any future maintenance or service of the purged electronics enclosure(s) being monitored by the TRYCLOPS X – Purge Controller, XP Version.

(*Normal Operation Mode*) Automatic Leakage Compensation Initial Startup Procedure:

The following procedure should be performed when initially starting up a system in ***Normal Operation Mode*** using a Purge Solutions, Inc. Automatic Leakage Compensation Purge Gas Inlet Kit and to calculate the dilution time for any purged electrical equipment that uses the TRYCLOPS X – Purge Controller, XP Version to monitor and control the electrical equipment enclosure(s) purge pressure and power.

WARNING: ***Failure to heed the following information may lead to injury of personnel or equipment damage.***

WARNING: ***Do not open the electrical equipment enclosure(s) in a hazardous area even when de-energized unless area has been properly tested and is known to not contain explosive materials.***

WARNING: ***Before initially starting the equipment, electrical power wiring must be checked for correct size and routing.***

WARNING: ***The following procedure only addresses the application of power to the TRYCLOPS X – Purge Controller, XP Version and to the electrical equipment located within the purged enclosure(s) being monitored and controlled by the TRYCLOPS X – Purge Controller, XP Version.***

NOTE: ***Refer to all ATEX, CEC, IECEx, NEC and NFPA certificates for any Special Conditions of Use. If the sign "X" is placed after the certificate number, it indicates that the equipment or protective system is subject to special conditions for safe use specified in the schedule of the certificate.***

Step 1:

Make sure that area surrounding the TRYCLOPS X – Purge Controller, XP Version and the electronics enclosure(s) the TRYCLOPS X – Purge Controller, XP Version will be monitoring and controlling, is known to be non-hazardous.

Step 2:

After it has been established that the area surrounding the TRYCLOPS X – Purge Controller, XP Version and the electronics enclosure(s) the TRYCLOPS X – Purge Controller, XP Version will be monitoring and controlling is non-hazardous, unscrew cover off the TRYCLOPS X – Purge Controller, XP Version and open all electronics enclosure door(s).

Step 3:

After opening electronics enclosure door(s), install Automatic Leakage Compensation Purge Gas Inlet Kit per installation instructions located in Purge Solutions, Inc. Purge Gas Inlet Kits Users Manual. ***Do not connect Automatic Leakage Compensation Purge Gas Inlet Kit solenoid valve wires to terminal blocks located in TRYCLOPS X – Purge Controller, XP Version.***

Step 4:

With all enclosure door(s) still open, turn on purge protective gas supply to Automatic Leakage Compensation Purge Gas Inlet Kit and verify purge protective gas is being supplied by reading pressure on pressure regulator gauge.

Step 5:

With protective gas supply pressure verified, assure that leakage compensation valve is completely closed on the Automatic Leakage Compensation Purge Gas Inlet Kit manifold block.

Step 6:

After assuring that leakage compensation valve is completely closed on the Automatic Leakage Compensation Purge Gas Inlet Kit manifold block, properly close and latch electronics enclosure door(s).

Step 7:

With enclosure door(s) properly closed and latched and purge protective gas supply pressure at Automatic Leakage Compensation Purge Gas Inlet Kit pressure regulator, write down pressure reading on gauge. ***The pressure reading will be needed to calculate the enclosure dilution time using Purge Solutions, Inc. Dilution Software.***

Step 8:

With all electronics enclosure door(s) properly closed and latched and pressure recorded, apply power to the TRYCLOPS X – Purge Controller, SM Version.

WARNING: DO NOT TURN ON POWER TO TRYCLOPS X – PURGE CONTROLLER, XP VERSION UNLESS AREA HAS BEEN PROPERLY TESTED AND IS KNOWN NOT TO CONTAIN EXPLOSIVE MATERIALS.

Step 9:

With power applied to the TRYCLOPS X – Purge Controller, XP Version and protective gas supply pressure at Automatic Leakage Compensation Purge Gas Inlet Kit pressure regulator, open leakage compensation valve on the Automatic Leakage Compensation Purge Gas Inlet Kit manifold block until the TRYCLOPS X – Purge Controller, XP Version’s green light starts to blink.

Step 10:

With TRYCLOPS X – Purge Controller, XP Version's green light blinking, using jam nut, lock leakage compensation valve in place on the Automatic Leakage Compensation Purge Gas Inlet Kit manifold block to maintain leakage compensation volume setting.

Step 11:

With Automatic Leakage Compensation Purge Gas Inlet Kit manifold block set to maintain leakage compensation volume, disconnect power from TRYCLOPS X – Purge Controller, XP Version.

Step 12:

With power disconnected from TRYCLOPS X – Purge Controller, XP Version turn off protective gas supply pressure to electronics enclosure at purge gas supply shut off valve not at Automatic Leakage Compensation Purge Gas Inlet Kit pressure regulator and open electronics enclosure door. ***The pressure reading on the Automatic Leakage Compensation Purge Gas Inlet Kit pressure gauge will be needed to calculate the enclosure dilution time using Purge Solutions, Inc. Dilution Software.***

Step 13:

With electronics enclosure door open and TRYCLOPS X – Purge Controller, XP Version cover still removed connect Automatic Leakage Compensation Purge Gas Inlet Kit solenoid valve wires to correct terminal blocks in TRYCLOPS X – Purge Controller, XP Version.

Step 14:

With Automatic Leakage Compensation Purge Gas Inlet Kit solenoid valve wires connected to terminal blocks in TRYCLOPS X – Purge Controller, XP Version set automatic dilution time cycle to ensure that at least five (5) times the volume of free space in the electronics enclosure is exchanged before power is automatically applied to the electrical equipment. Refer to Figure 2 for location and details of dilution time switches.

WARNING: ***The number of exchanged volumes may be higher in some situations.***

CAUTION: ***Do not decrease the timer setting required to adequately dilute the enclosure volume by five (5) times its free space. If timer setting is too short, the electrical equipment enclosure(s) may not be diluted adequately before power is applied. This could result in injury to personnel or equipment damage.***

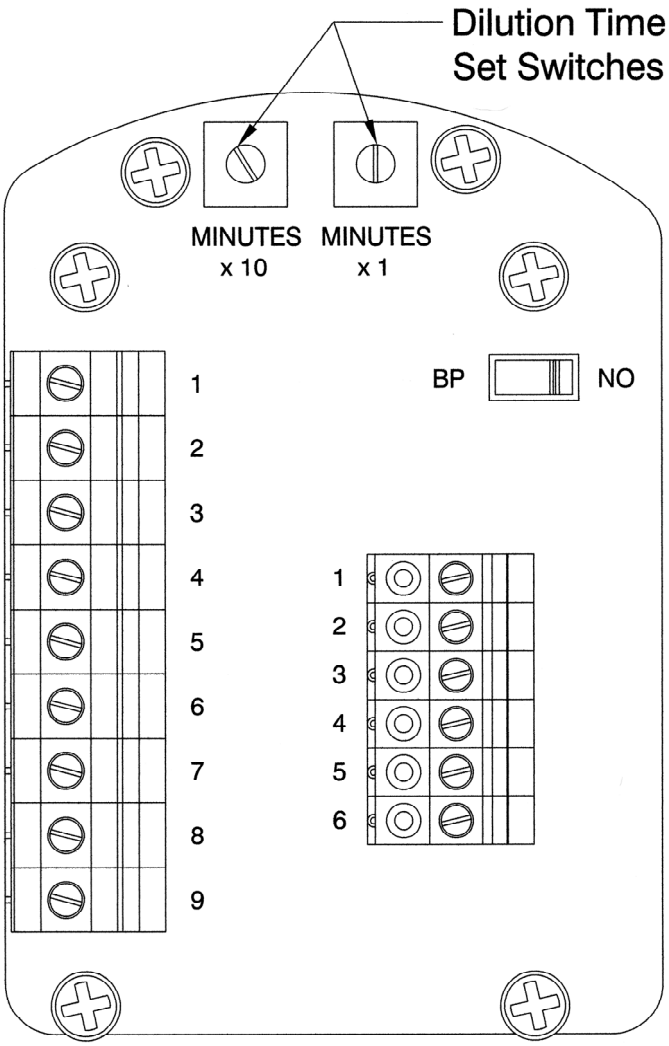

Figure 2

Step 15:

With automatic dilution purge time cycle set, properly screw on TRYCLOPS X – Purge Controller, XP Version's cover back on housing and secure cover with retaining clip.

Step 16:

After properly screwing TRYCLOPS X – Purge Controller, XP Version's cover on housing and secure with retaining clip, properly close and latch all enclosure door(s).

Step 17:

With all electronics enclosure door(s) properly closed and latched, turn on power to TRYCLOPS X – Purge Controller, XP Version.

***WARNING:* DO NOT TURN ON POWER TO TRYCLOPS X – PURGE CONTROLLER, XP VERSION UNLESS AREA HAS BEEN PROPERLY TESTED AND IS KNOWN NOT TO CONTAIN EXPLOSIVE MATERIALS.**

Step 18:

With power applied to the TRYCLOPS X – Purge Controller, XP Version turn on purge gas at supply shut off valve pressure, then the TRYCLOPS X – Purge Controller, XP Version's green light should begin to blink this should also actuate the Automatic Leakage Compensation Purge Gas Inlet Kit solenoid valve allowing purge gas into enclosure during the dilution cycle.

Step 19:

With purge protective gas being supplied to electronics enclosure through the Automatic Leakage Compensation Purge Gas Inlet Kit solenoid valve and TRYCLOPS X – Purge Controller, XP Version's green light blinking, the automatic dilution time cycle will start. ***The automatic dilution time cycle must be set long enough to ensure that at least five (5) times the volume of free space in the enclosure of purge protective gas is exchanged before power can be automatically applied to the electrical equipment inside the purged enclosure by the TRYCLOPS X – Purge Controller, XP Version.***

***WARNING:* The number of exchanged volumes may be higher in some situations.**

***CAUTION:* Do not decrease the timer setting required to adequately dilute the enclosure volume by five (5) times its free space. If timer setting is too short, the electrical equipment enclosure(s) may not be diluted adequately before power is applied. This could result in injury to personnel or equipment damage.**

***NOTE:* If you are using one of Purge Solutions, Inc. Automatic Leakage Compensation Purge Gas Inlet Kits to supply purge gas to an enclosure the TRYCLOPS X – Purge Controller, XP Version is monitoring refer to Purge Solutions, Inc. web site to use Dilution Time Software to calculate dilution time for your size enclosure. The Dilution Software can only be used if you are using a Purge Solutions, Inc. Leakage Compensation Purge Gas Inlet Kit, as the Dilution Time Software calculations are based data from test performed on Purge Solutions, Inc. Leakage Compensation Purge Gas Inlet Kits and proprietary exhaust vents.**

Step 20:

After the automatic dilution purge time cycle has elapsed and the following conditions are being met, the monitored enclosure pressure is being maintained above 0.30 inch H2O (0.75 mbar) for explosive gas hazardous areas, 0.50 inch H2O (1.25 mbar) for combustible dust hazardous areas and enclosure exhaust port is registering adequate flow, the green light will stop blinking and go into a steady state. Power will be disconnected from the Automatic Leakage Compensation Purge gas Inlet Kit solenoid valve and power will then be automatically applied by the TRYCLOPS X – Purge Controller, XP Version to the electrical equipment within the protected purged electronics enclosure.

NOTE: ***If purge pressure becomes less than 0.30 inch H2O (0.75 mbar) for explosive gas hazardous areas, 0.50 inch H2O (1.25 mbar) for combustible dust hazardous areas or exhaust flow drops too low, the TRYCLOPS X – Purge Controller, XP Version shuts off power to the electrical equipment it has been monitoring and controlling. When the power, purge pressure or exhaust flow is restored, the TRYCLOPS X – Purge Controller, XP Version automatically begins the automatic dilution time cycle. After the automatic dilution time cycle has elapsed and the following conditions are being met. The monitored enclosure pressure is being maintained above 0.30 inch H2O (0.75 mbar) for explosive gas hazardous areas, 0.50 inch H2O (1.25 mbar) for combustible dust hazardous areas and enclosure exhaust port is registering adequate flow. Power will then be automatically applied by the TRYCLOPS X – Purge Controller, XP Version to the electrical equipment within the protected purged enclosure.***

Step 21:

After an automatic dilution time has been established, the dilution time, supply pressure and Automatic Leakage Compensation Purge Gas Inlet Kit regulator gauge pressure should be recorded for use during any future maintenance or service of the purge electronics enclosure being monitored and controlled by the TRYCLOPS X – Purge Controller, XP Version.

(*Power Disconnect By-Pass Switch Mode*) Continuous Dilution Initial Startup Procedure:

The following procedure should be performed when initially starting up a system in ***Power Disconnect By-Pass Switch Mode*** using a Continuous Dilution Purge Gas Inlet Kit and to calculate the dilution time for any purged electronics equipment enclosure(s) that uses the TRYCLOPS X – Purge Controller, XP Version to monitor and control.

For applications were immediate disconnect of power to protected electronics in purged electronics enclosure(s) would result in a more hazardous condition; a Power Disconnect By-Pass Switch is provided, which will allow power to the enclosure(s) electronics to continue upon loss of purge pressure(s) and / or exhaust vent flow(s).

The following procedure should be performed when initially starting up any purged electrical equipment that uses the TRYCLOPS X – Purge Controller, XP Version with the power disconnect by-pass switch in the By-Pass “BP” position to monitor and control the electrical equipment enclosure(s).

WARNING: ***Failure to heed the following information may lead to injury of personnel or equipment damage.***

WARNING: ***Do not open the electrical equipment enclosure(s) in a hazardous area even when de-energized unless area has been properly tested and is known to not contain explosive materials.***

WARNING: ***Applicable permits must be obtained and appropriate precautions must be taken to prevent possible injury to personnel or equipment damage when using the TRYCLOPS X – Purge Controller, XP Version’s power disconnect by-pass switch.***

WARNING: ***Placing the TRYCLOPS X – Purge Controller, XP Version power disconnect by-pass switch into the By-Pass position disables safe operation of the system. By-Pass mode is to be used ONLY when immediate disconnect of power to protected electrical equipment in enclosure(s) would result in a more hazardous condition AND ONLY if area is known to be non-hazardous.***

WARNING: ***Before initially starting the equipment, electrical power wiring must be checked for correct size and routing.***

WARNING: ***The following procedure only addresses the application of power to the TRYCLOPS X – Purge Controller, XP Version and to the electrical equipment located within the purged enclosure(s) being monitored and controlled by the TRYCLOPS X – Purge Controller, XP Version.***

***NOTE:* Refer to all ATEX, CEC, IECEx, NEC and NFPA certificates for any Special Conditions of Use. If the sign "X" is placed after the certificate number, it indicates that the equipment or protective system is subject to special conditions for safe use specified in the schedule of the certificate.**

Step 1:

If power disconnect by-pass switch is to be put into the By-Pass position; first make sure that area-surrounding the TRYCLOPS X – Purge Controller, XP Version and the electronics enclosure(s) that the TRYCLOPS X – Purge Controller, XP Version will be monitoring and controlling is known to be non-hazardous.

Step 2:

After it has been established that the area surrounding the TRYCLOPS X – Purge Controller, XP Version and the electronics enclosure(s) that the TRYCLOPS X – Purge Controller, XP Version will be monitoring and controlling is non-hazardous, remove the cover from the TRYCLOPS X – Purge Controller, XP Version housing and open all electronics enclosure door(s).

Step 3:

After opening all electronics enclosure door(s), install Continuous Dilution Purge Gas Inlet Kit per installation instructions located in Purge Solutions, Inc. Purge Gas Inlet Kits Users Manual.

Step 4:

With Continuous Dilution Purge Gas Kit installed and TRYCLOPS X – Purge Controller, XP Version's cover removed, move the power disconnect by-pass switch from Normal Operation "NO" position to the By-Pass "BP" position. Refer to Figure 3 for location and details of Power Disconnect By-Pass Switch.

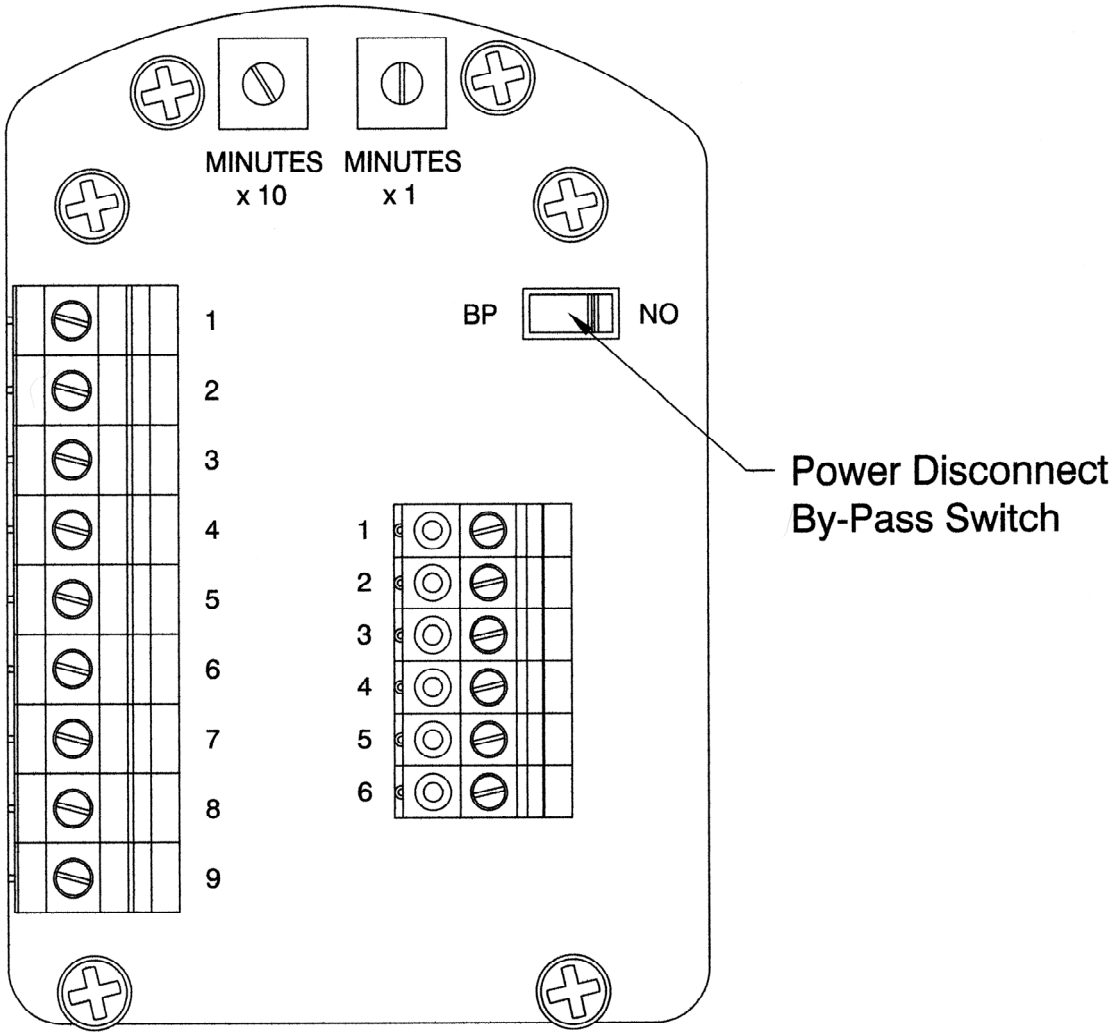

Figure 3

Step 5:

With electronics enclosure door(s) still open, turn on purge protective gas supply to electronics enclosure by turning the Continuous Dilution Purge Gas Inlet Kit shutoff valve to the ON position and verify that enclosure is being supplied with purge gas.

Step 6:

After it has been verified that the electronics enclosure is being supplied with purge gas, turn off purge gas supply pressure to electronics enclosure at Continuous Dilution Purge Gas Inlet Kit pressure regulator.

Step 7:

With protective gas supply pressure off at Continuous Dilution Purge Gas Inlet Kit regulator, close and latch electronics enclosure door(s).

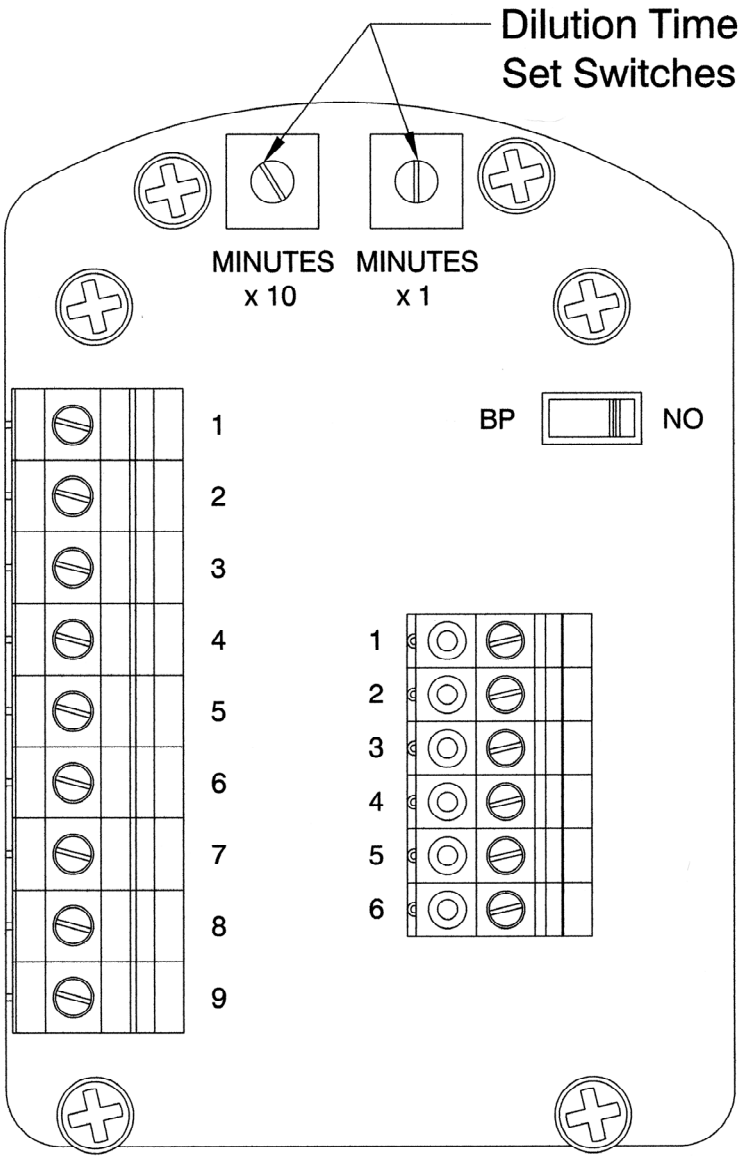

Figure 2

Step 8:

With electronics enclosure door(s) properly closed and latched, turn on power to TRYCLOPS X – Purge Controller, SM Version.

***WARNING:* DO NOT TURN ON POWER TO TRYCLOPS X – PURGE CONTROLLER, XP VERSION UNLESS AREA HAS BEEN PROPERLY TESTED AND IS KNOWN NOT TO CONTAIN EXPLOSIVE MATERIALS.**

Step 9:

With power applied to the TRYCLOPS X – Purge Controller, XP Version raise the pressure of the purge protective gas using the Continuous Dilution Purge Gas Inlet Kit pressure regulator until TRYCLOPS X – Purge Controller, XP Version's green light begins to blink.

Step 10:

With purge protective gas being supplied to electronics enclosure and TRYCLOPS X – Purge Controller, XP Version's green indicator light blinking, turn Continuous Dilution Purge Gas Inlet Kit manifold shut-off valve to the OFF position.

Step 11:

With Continuous Dilution Purge Gas Inlet Kit manifold shut-off valve in the OFF position, write down the pressure reading of the pressure regulator gauge. ***The pressure reading will be needed to calculate the enclosure dilution time using Purge Solutions, Inc. Dilution Software.***

Step 12:

With Continuous Dilution Purge Gas Inlet Kit manifold shut-off valve in the OFF position and the pressure reading of the pressure regulator gauge written down, disconnect power from the TRYCLOPS X – Purge Controller, XP Version.

Step 13:

With power disconnected from the TRYCLOPS X – Purge Controller, XP Version open enclosure door to access the TRYCLOPS X – Purge Controller, XP Version to set automatic dilution time cycle.

NOTE: ***If you are using one of Purge Solutions, Inc. Continuous Dilution Purge Gas Inlet Kits to supply purge gas to an electronics enclosure the TRYCLOPS X – Purge Controller, XP Version is monitoring refer to Purge Solutions, Inc. web site to use Dilution Time Software to calculate dilution time for your size enclosure. The Dilution Software can only be used if you are using a Purge Solutions, Inc. Continuous Dilution Purge Gas Inlet Kit, as the Dilution Time Software calculations are based data from test performed on Purge Solutions, Inc. Continuous Dilution Purge Gas Inlet Kits and proprietary exhaust vents.***

Step 14:

With cover removed from housing to access the TRYCLOPS X – Purge Controller, XP Version set automatic dilution time cycle to least five (5) times the volume of free space in the electronics enclosure is exchanged before power is automatically applied to the electrical equipment from the TRYCLOPS X – Purge Controller, XP Version. ***Refer to Figure 2 for location and details of dilution time switches in TRYCLOPS X – Purge Controller, XP Version.***

WARNING: ***The number of exchanged volumes may be higher in some situations.***

CAUTION: ***Do not decrease the timer setting required to adequately dilute the enclosure volume by five (5) times its free space. If timer setting is too short, the electrical equipment enclosure may not be diluted adequately before power is applied. This could result in injury to personnel or equipment damage.***

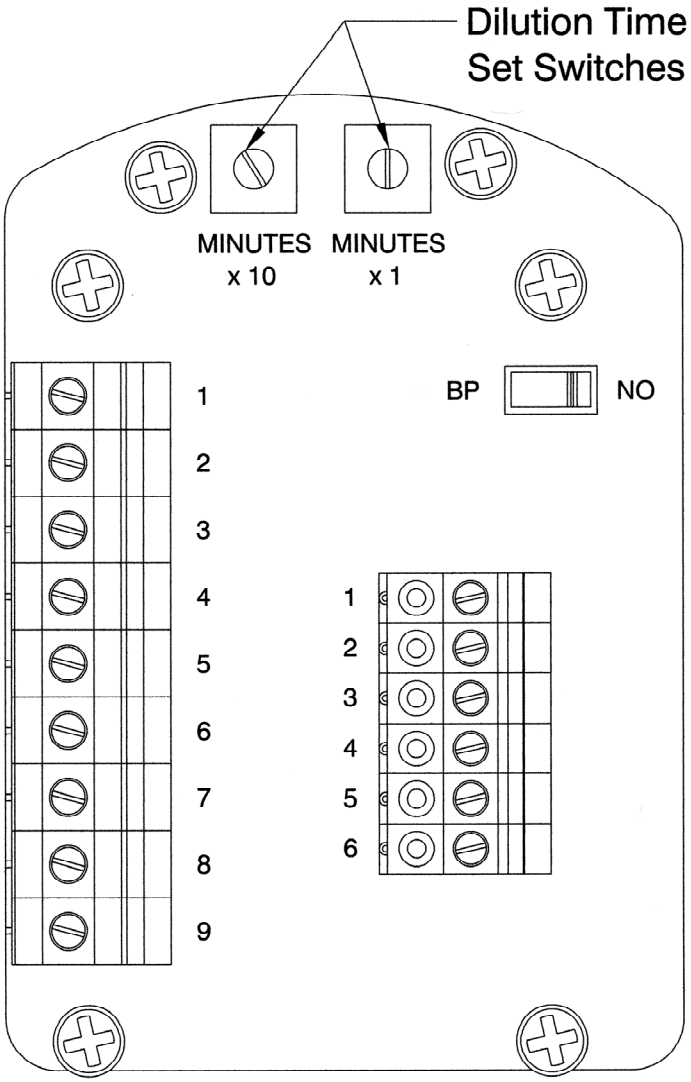

Figure 2

Step 15:

After automatic dilution purge time cycle set, properly screw cover and secure with retaining clip to TRYCLOPS X – Purge Controller, XP Version's housing.

Step 16:

After properly securing cover with retaining clip to TRYCLOPS X – Purge Controller, XP Version housing, properly close and latch electronics enclosure door(s).

Step 17:

With electronics enclosure door(s) properly closed and latched, turn on power to TRYCLOPS X – Purge Controller, XP Version.

***WARNING:* DO NOT TURN ON POWER TO TRYCLOPS X – PURGE CONTROLLER, XP VERSION UNLESS AREA HAS BEEN PROPERLY TESTED AND IS KNOWN NOT TO CONTAIN EXPLOSIVE MATERIALS.**

Step 18:

With power applied to the TRYCLOPS X – Purge Controller, XP Version turn the Continuous Dilution Purge Gas Inlet Kit manifold shut-off valve to the ON position and the TRYCLOPS X – Purge Controller, XP Version's green light should begin to blink.

Step 19:

With purge protective gas being supplied to electronics enclosure(s) and TRYCLOPS X – Purge Controller, XP Version's green indicator light blinking, the automatic dilution purge time cycle will start. ***The automatic dilution time cycle must be set long enough to ensure that at least five (5) times the volume of free space of the largest enclosure of purge protective gas is exchanged before power can be automatically applied to the electrical equipment inside the purged largest enclosure by the TRYCLOPS X – Purge Controller, XP Version.***

***WARNING:* The number of exchanged volumes may be higher in some situations.**

***NOTE:* Purge dilution time can be reduced by increasing purge supply gas pressure at Continuous Dilution Purge Gas Inlet Kit pressure regulator. Repeat steps 6 through 13 until satisfactory dilution time has been met.**

Step 20:

After the automatic dilution purge time cycle has elapsed and the following conditions are being met, the monitored enclosure(s) pressure is being maintained above 0.50 inches H_2O (1.25 mbar) and enclosure exhaust port is registering adequate flow, the green indicator will stop blinking and go into a steady state. Power will then be automatically applied by the TRYCLOPS X – Purge Controller, XP Version to the electrical equipment within the protected purged enclosure(s).

WARNING: ***Placing the TRYCLOPS X – Purge Controller, XP Version power disconnect by-pass switch into the By-Pass position disables safe operation of the system. By-Pass mode is to be used ONLY when immediate disconnect of power to protected electrical equipment in enclosure would result in a more hazardous condition AND ONLY if area is known to be non-hazardous.***

NOTE: ***When the TRYCLOPS X – Purge Controller, XP Version is in by-pass mode power WILL NOT be disconnected if purge pressure becomes less than 0.30 inch H2O (0.75 mbar) for explosive gas hazardous areas, 0.50 inch H2O (1.25 mbar) for combustible dust hazardous areas or exhaust flow drops too low from the electrical equipment it has been monitoring and controlling.***

NOTE: ***When the TRYCLOPS X – Purge Controller, XP Version is in by-pass mode the TRYCLOPS X – Purge Controller, XP Version will ONLY alarm if purge pressure becomes less than 0.30 inch H2O (0.75 mbar) for explosive gas hazardous areas, 0.50 inch H2O (1.25 mbar) for combustible dust hazardous areas or exhaust flow drops too low from the electrical equipment it has been monitoring and controlling.***

NOTE: ***When the TRYCLOPS X – Purge Controller, XP Version is in by-pass mode the TRYCLOPS X – Purge Controller, XP Version and purge pressure or exhaust flow is restored, the TRYCLOPS X – Purge Controller, XP Version WILL NOT automatically begins the dilution purge time before restoring power to the electrical equipment within the protected purged enclosure(s).***

NOTE: ***When the TRYCLOPS X – Purge Controller, XP Version is in by-pass mode AC line power must first be disconnected from the TRYCLOPS X – Purge Controller, XP Version and then re-connected before the automatic dilution purge time will begin.***

WARNING: ***When the TRYCLOPS X – Purge Controller, XP Version is in by-pass mode; personnel must remove power from the electrical system IMMEDIATELY if hazardous conditions are suspected.***

Step 21:

After an automatic dilution time has been established, the automatic dilution time, purge protective gas supply pressure and Continuous Dilution Purge Gas Inlet Kit regulator gauge pressure should be recorded for used during any future maintenance or service of the purged electronics enclosure being monitored and controlled by the TRYCLOPS X – Purge Controller, XP Version.

(*Power Disconnect By-Pass Switch Mode*) Automatic Leakage Compensation Initial Startup Procedure:

The following procedure should be performed when initially starting up a system in ***Power Disconnect By-Pass Switch Mode*** using a Purge Solutions, Inc. Automatic Leakage Compensation Purge Gas Inlet Kit and to calculate the dilution time for any purged electronics equipment enclosure(s) that uses the TRYCLOPS X – Purge Controller, XP Version to monitor and control.

For applications were immediate disconnect of power to protected electrical in purged enclosure(s) would result in a more hazardous condition; a Power Disconnect By-Pass Switch is provided, which will allow power to the enclosure(s) electronics to continue upon loss of purge pressure(s) and / or exhaust vent flow(s).

The following procedure should be performed when initially starting up any purged electrical equipment that uses the TRYCLOPS X – Purge Controller, XP Version with the power disconnect by-pass switch in the By-Pass “BP” position to monitor and control the electrical equipment enclosure(s).

WARNING: ***Failure to heed the following information may lead to injury of personnel or equipment damage.***

WARNING: ***Do not open the electrical equipment enclosure(s) in a hazardous area even when de-energized unless area has been properly tested and is known to not contain explosive materials.***

WARNING: ***Before initially starting the equipment, electrical power wiring must be checked for correct size and routing.***

WARNING: ***The following procedure only addresses the application of power to the TRYCLOPS X – Purge Controller, XP Version and to the electrical equipment located within the purged enclosure(s) being monitored and controlled by the TRYCLOPS X – Purge Controller, XP Version.***

NOTE: ***Refer to all ATEX, CEC, IECEx, NEC and NFPA certificates for any Special Conditions of Use. If the sign “X” is placed after the certificate number, it indicates that the equipment or protective system is subject to special conditions for safe use specified in the schedule of the certificate.***

Step 1:

If power disconnect by-pass switch is to be put into the By-Pass position; first make sure that area-surrounding the TRYCLOPS X – Purge Controller, XP Version and the electronics enclosure(s) that the TRYCLOPS X – Purge Controller, XP Version will be monitoring and controlling is known to be non-hazardous.

Step 2:

After it has been established that the area surrounding the TRYCLOPS X – Purge Controller, XP Version and all the electronics enclosure(s) that the TRYCLOPS X – Purge Controller, XP Version will be monitoring and controlling is non-hazardous, unscrew and remove the cover from the TRYCLOPS X – Purge Controller, XP Version housing and open all electronics enclosure door(s) the TRYCLOPS X – Purge Controller, XP Version is monitoring.

Step 3:

After opening electronics enclosure door(s) open TRYCLOPS X- Purge Controller, XP Version cover and then install Automatic Leakage Compensation Purge Gas Inlet Kit per installation instructions located in Purge Gas Inlet Kits Users Manual. ***Do not connect Automatic Leakage Compensation Purge Gas Inlet Kit solenoid valve wires to terminal blocks in TRYCLOPS X – Purge Controller, XP Version.***

Step 4:

With electronics enclosure door(s) still open, move the power disconnect by-pass switch from Normal Operation “NO” position to the By-Pass “BP” position. Refer to Figure 3 for location and details of Power Disconnect By-Pass Switch.

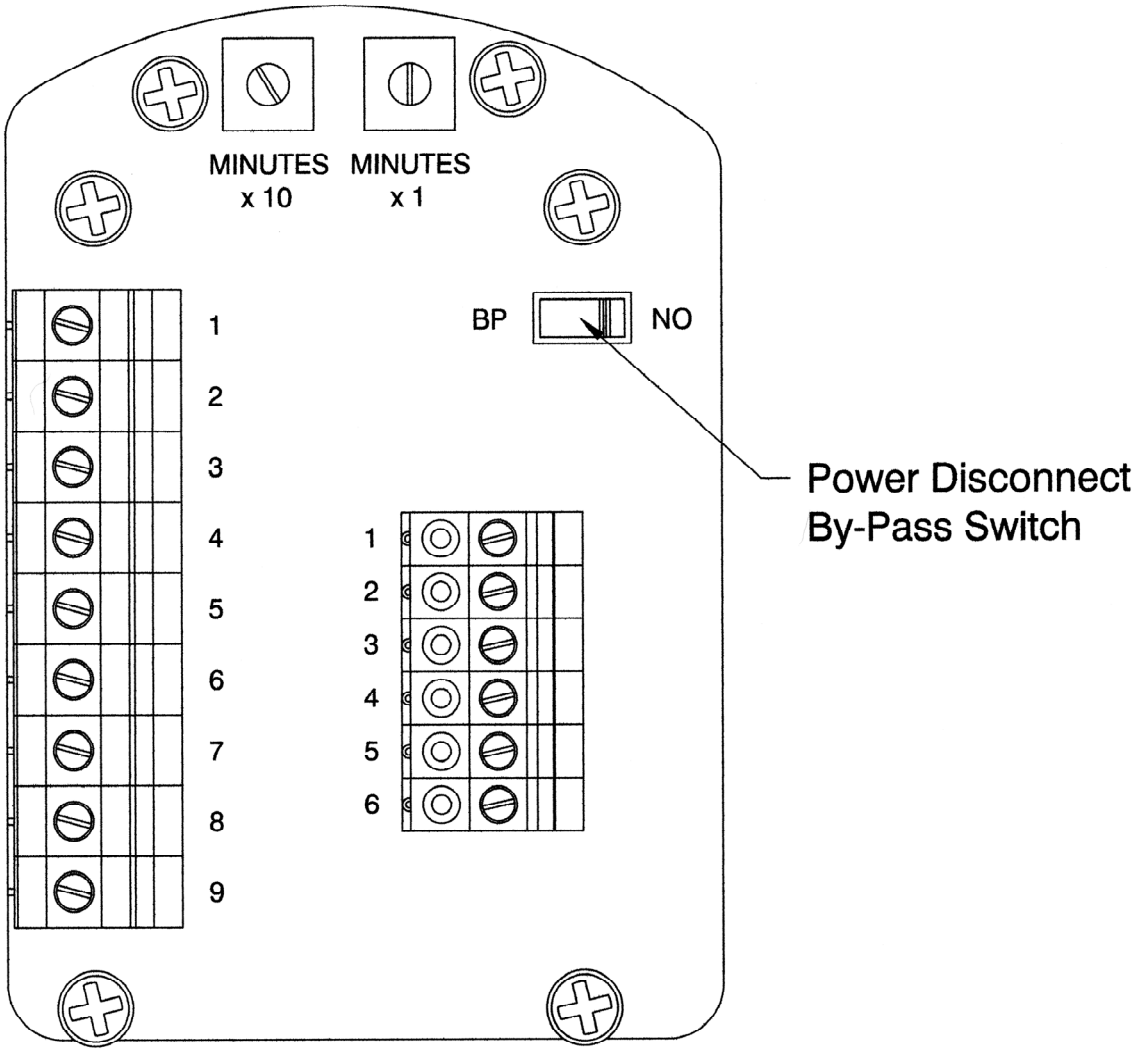

Figure 3

Step 5:

With electronics enclosure door(s) still open, turn on purge protective gas supply to Automatic Leakage Compensation Purge Gas Inlet Kit and verify purge protective gas is being supplied by reading pressure on pressure regulator gauge.

Step 6:

With protective gas supply pressure verified, assure that leakage compensation valve is completely closed on the Automatic Leakage Compensation Purge Gas Inlet Kit manifold block.

Step 7:

After assuring that leakage compensation valve is completely closed on the Automatic Leakage Compensation Purge Gas Inlet Kit manifold block, properly close and latch electronics enclosure door(s).

Step 8:

With electronics enclosure door(s) properly closed and latched and purge protective gas supply pressure at Automatic Leakage Compensation Purge Gas Inlet Kit pressure regulator, write down pressure reading on gauge. ***The pressure reading will be needed to calculate the enclosure dilution time using Purge Solutions, Inc. Dilution Software.***

Step 9:

With electronics enclosure door(s) properly closed and latched and pressure recorded, apply power to TRYCLOPS X – Purge Controller, XP Version.

WARNING: DO NOT TURN ON POWER TO TRYCLOPS X – PURGE CONTROLLER, XP VERSION UNLESS AREA HAS BEEN PROPERLY TESTED AND IS KNOWN NOT TO CONTAIN EXPLOSIVE MATERIALS.

Step 10:

With power applied to the TRYCLOPS X – Purge Controller, XP Version and protective gas supply pressure at Automatic Leakage Compensation Purge Gas Inlet Kit pressure regulator, open leakage compensation valve on the Automatic Leakage Compensation Purge Gas Inlet Kit manifold block until the TRYCLOPS X – Purge Controller, XP Version's green light starts to blink.

Step 11:

With TRYCLOPS X – Purge Controller, XP Version's green light blinking, using jam nut, lock leakage compensation valve in place on the Automatic Leakage Compensation Purge Gas Inlet Kit manifold block to maintain leakage compensation volume setting.

Step 12:

With Automatic Leakage Compensation Purge Gas Inlet Kit manifold block set to maintain leakage compensation volume, disconnect power from TRYCLOPS X – Purge Controller, XP Version.

Step 13:

With power disconnected from TRYCLOPS X – Purge Controller, XP Version turn off protective gas supply pressure to electronics enclosure at purge gas supply shut off valve not at Automatic Leakage Compensation Purge Gas Inlet Kit pressure regulator and open electronics enclosure door. ***The pressure reading on the Automatic Leakage Compensation Purge Gas Inlet Kit pressure gauge will be needed to calculate the enclosure dilution time using Purge Solutions, Inc. Dilution Software.***

Step 14:

With electronics enclosure door(s) still opened and cover removed from TRYCLOPS X – Purge Controller, XP Version housing, connect Automatic Leakage Compensation Purge Gas Inlet Kit solenoid valve wires to correct terminal blocks in TRYCLOPS X – Purge Controller, XP Version.

Step 15:

With Automatic Leakage Compensation Purge Gas Inlet Kit solenoid valve wires connected to correct terminal blocks in TRYCLOPS X – Purge Controller, XP Version set automatic dilution time cycle to ensure that at least five (5) times the volume of free space in the electronics enclosure is exchanged before power is automatically applied to the electrical equipment. Refer to Figure 2 for location and details of dilution time switches.

WARNING: ***The number of exchanged volumes may be higher in some situations.***

CAUTION: ***Do not decrease the timer setting required to adequately dilute the enclosure volume by five (5) times its free space. If timer setting is too short, the electrical equipment enclosure may not be diluted adequately before power is applied. This could result in injury to personnel or equipment damage.***

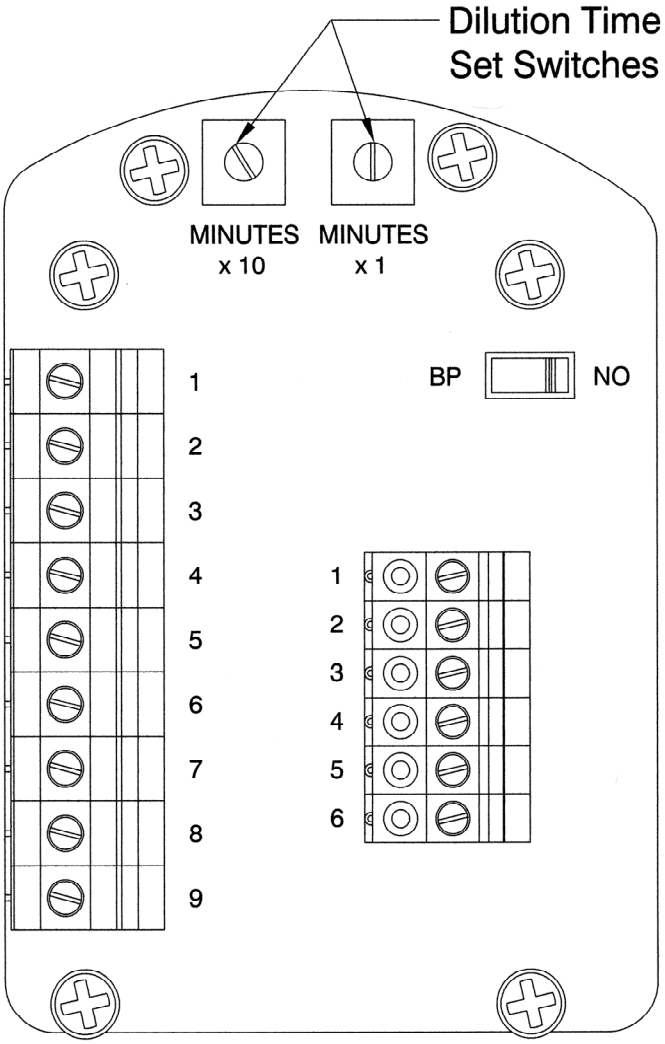

Figure 2

Step 16:

With automatic dilution purge time cycle set, screw TRYCLOPS X – Purge Controller, XP Version's properly screw cover back on housing and secure with retaining clip.

Step 17:

After properly securing cover to TRYCLOPS X – Purge Controller, XP Version housing with retainer clip, properly close and latch electronics enclosure door(s).

Step 18:

With electronics enclosure door(s) properly closed and latched, turn on power to TRYCLOPS X – Purge Controller, XP Version.

***WARNING:* DO NOT TURN ON POWER TO TRYCLOPS X – PURGE CONTROLLER, XP VERSION UNLESS AREA HAS BEEN PROPERLY TESTED AND IS KNOWN NOT TO CONTAIN EXPLOSIVE MATERIALS.**

Step 19:

With power applied to the TRYCLOPS X – Purge Controller, XP Version turn on purge gas at supply shut off valve, then the TRYCLOPS X – Purge Controller, XP Version's green light should begin to blink this should also actuate the Automatic Leakage Compensation Purge Gas Inlet Kit solenoid valve allowing purge gas into enclosure(s) during the dilution cycle.

Step 20:

With purge protective gas being supplied to electronics enclosure(s) through the Automatic Leakage Compensation Purge Gas Inlet Kit solenoid valve and TRYCLOPS X – Purge Controller, XP Version's green light blinking, the automatic dilution time cycle will start. ***The automatic dilution time cycle must be set long enough to ensure that at least five (5) times the volume of free space in the enclosure of purge protective gas is exchanged before power can be automatically applied to the electrical equipment inside the purged enclosure by the TRYCLOPS X – Purge Controller, XP Version.***

***WARNING:* The number of exchanged volumes may be higher in some situations.**

***NOTE:* If you are using one of Purge Solutions, Inc. Automatic Leakage Compensation Purge Gas Inlet Kits to supply purge gas to an enclosure(s) the TRYCLOPS X – Purge Controller, XP Version is monitoring refer to Purge Solutions, Inc. web site to use Dilution Time Software to calculate dilution time for your largest size enclosure. The Dilution Software can only be used if you are using an Automatic Purge Solutions, Inc. Leakage Compensation Purge Gas Inlet Kit, as the Dilution Time Software calculations are based data from test performed on Purge Solutions, Inc. Automatic Leakage Compensation Purge Gas Inlet Kits and proprietary vents.**

Step 21:

After the automatic dilution purge time cycle has elapsed and the following conditions are being met, the monitored electronics enclosure(s) pressure is being maintained above 0.30 inch H2O (0.75 mbar) for explosive gas hazardous areas, 0.50 inch H2O (1.25 mbar) for combustible dust hazardous areas and electronics enclosure(s) exhaust port is registering adequate flow, the green will stop blinking and go into a steady state. Power will then be automatically applied by the TRYCLOPS X – Purge Controller, XP Version to the electrical equipment within the protected purged enclosure(s).

WARNING: ***Placing the TRYCLOPS X – Purge Controller, XP Version power disconnect by-pass switch into the By-Pass position disables safe operation of the system. By-Pass mode is to be used ONLY when immediate disconnect of power to protected electrical equipment in enclosure(s) would result in a more hazardous condition AND ONLY if area is known to be non-hazardous.***

NOTE: ***When the TRYCLOPS X – Purge Controller, XP Version is in by-pass mode power WILL NOT be disconnected if purge pressure becomes less than 0.30 inch H2O (0.75 mbar) for explosive gas hazardous areas, 0.50 inch H2O (1.25 mbar) for combustible dust hazardous areas or exhaust flow drops too low from the electrical equipment it has been monitoring and controlling.***

NOTE: ***When the TRYCLOPS X – Purge Controller, XP Version is in by-pass mode the TRYCLOPS X – Purge Controller, XP Version will ONLY alarm if purge pressure becomes less than 0.30 inch H2O (0.75 mbar) for explosive gas hazardous areas, 0.50 inch H2O (1.25 mbar) for combustible dust hazardous areas or exhaust flow drops too low from the electrical equipment it has been monitoring and controlling.***

NOTE: ***When the TRYCLOPS X – Purge Controller, XP Version is in by-pass mode the TRYCLOPS X – Purge Controller, XP Version and purge pressure or exhaust flow is restored, the TRYCLOPS X – Purge Controller, XP Version WILL NOT automatically begins the dilution purge time before restoring power to the electrical equipment within the protected purged enclosure(s).***

NOTE: ***When the TRYCLOPS X – Purge Controller, XP Version is in by-pass mode AC line power must first be disconnected from the TRYCLOPS X – Purge Controller, XP Version and then re-connected before the automatic dilution purge time will begin.***

WARNING: ***When the TRYCLOPS X – Purge Controller, XP Version is in by-pass mode; personnel must remove power from the electrical system IMMEDIATELY if hazardous conditions are suspected.***

Step 22:

After an automatic dilution time has been established, the dilution time, supply pressure and Automatic Leakage Compensation Purge Gas Inlet Kit regulator gauge pressure should be recorded for use during any future maintenance or service of the purge electronics enclosure being monitored and controlled by the TRYCLOPS X – Purge Controller, XP Version.

(*Normal Operation Mode*) Continuous Dilution Maintenance or Service Procedure:

The following procedure should be performed when using the TRYCLOPS X – Purge Controller, XP Version's maintenance switch to perform maintenance or service on any system in ***Normal Operation Mode*** using a Continuous Dilution Purge Gas Inlet Kit for any purged electrical equipment that uses the TRYCLOPS X – Purge Controller, XP Version to monitor and control the electrical equipment enclosure(s) purge pressure and power.

WARNING: ***Failure to heed the following, information may lead to injury to personnel or equipment damage.***

CAUTION: ***Do not open the electrical equipment enclosure(s) in a hazardous area even when de-energized unless area has been properly tested and is known to not contain explosive materials.***

WARNING: ***Applicable permits must be obtained and appropriate precautions must be taken to prevent possible injury to personnel or equipment damage when using the TRYCLOPS X – Purge Controller, XP Version's maintenance switch.***

WARNING: ***Placing the TRYCLOPS X – Purge Controller, XP Version into Maintenance position disables safe operation of the system. Maintenance mode is to be used ONLY when required for maintenance or service AND ONLY if area is known to be non-hazardous.***

CAUTION: ***Electrical equipment components may be hot even when power is not applied. Take appropriate precautions to prevent injury from contact with hot items.***

NOTE: ***If required the TRYCLOPS X – Purge Controller, XP Version's maintenance switch can be set to Maintenance position to provide power to the electrical equipment mounted in the electrical enclosure(s) the TRYCLOPS X – Purge Controller, XP Version is monitoring while the enclosure door(s) is open. When the maintenance switch is in the maintenance position, the safety power shut off function is disabled! Do not place the maintenance switch in the maintenance position unless it is absolutely necessary and the area is known to be non-hazardous. As soon as maintenance or service is complete, the maintenance switch MUST be placed in the Normal Operation position.***

Step 1:

If maintenance or service must be performed with power applied to the electrical equipment mounted within the purged enclosure(s) the TRYCLOPS X – Purge Controller, XP Version is monitoring, first make sure that area-surrounding the electronics enclosure(s), which the TRYCLOPS X – Purge Controller, XP Version is monitoring and controlling is known to be non-hazardous.

Step 2:

After it has been established that the area surrounding the electronics enclosure(s) is non-hazardous, unscrew the cover over the TRYCLOPS X – Purge Controller, XP Version's maintenance switch. Insert key and turn switch to the Maintenance position. ***Maintenance switch key can only be removed from maintenance switch in Normal Operation position and cover cannot be screwed back on until key is removed from switch.*** This means, that the maintenance switch key must remain in the switch while maintenance or service is being performed. When the TRYCLOPS X – Purge Controller, XP Version is in maintenance mode the indicator light will begin blinking red and, if connected, a remote alarm will be sent.

Step 3:

With the TRYCLOPS X – Purge Controller, XP Version in maintenance mode, turn off purge supply gas at the shut off valve on Continuous Dilution Purge Gas Inlet Kit manifold block. ***Not at the Continuous Dilution Purge Gas Inlet Kit pressure regulator. The Continuous Dilution Purge Gas Inlet Kit pressure regulator setting should remain the same to keep the purge gas CFM (LPM) the same as what was established during the initial automatic dilution time set up.***

WARNING: Do not leave the electrical equipment unattended while the TRYCLOPS X – Purge Controller, XP Version is in maintenance switch is in the Maintenance position. Personnel must remove power from the electrical system IMMEDIATELY if hazardous conditions are suspected.

Step 4:

With protective gas supply off at the shut off valve, open electronics enclosure door(s).

CAUTION: Electrical equipment components may be hot even when power is not applied. Take appropriate precautions to prevent injury from contact with hot items.

Step 5:

With electronics enclosure door(s) opened and the TRYCLOPS X – Purge Controller, XP Version in maintenance mode applying power to the electronics, perform required maintenance or service.

Step 6:

After maintenance or service has been performed and completed, properly close and latch electronics enclosure door(s).

Step 7:

After all enclosure door(s) have been properly closed and latched, turn on purge supply gas at the shut off valve on Continuous Dilution Purge Gas Inlet Kit manifold block. ***Not at the Continuous Dilution Purge Gas Inlet Kit pressure regulator. The Continuous Dilution Purge Gas Inlet Kit pressure regulator setting should remain the same to keep the purge gas CFM (LPM) the same as what was established during the initial automatic dilution time set up.***

Step 8:

With electronics all enclosure doors latched and purge supply gas turned on at the shut off valve, return TRYCLOPS X – Purge Controller, XP Version maintenance switch to the Normal Operation position. After the maintenance switch has been returned to the Normal Operations position and the following conditions are being met. The monitored enclosure pressure(s) is being maintained above 0.30 inch H2O (0.75 mbar) for explosive gas hazardous areas, 0.50 inch H2O (1.25 mbar) for combustible dust hazardous areas and enclosure exhaust port(s) is registering proper flow(s), the TRYCLOPS X – Purge Controller, XP Version will go from a light blinking red to a steady state of green and power will remain connected through the TRYCLOPS X – Purge Controller, XP Version to the electrical equipment within the purged enclosure(s).

Step 9:

After TRYCLOPS X – Purge Controller, XP Version's maintenance switch has been returned to Normal Operations position, remove key and screw maintenance switch cover back on as before.

NOTE: ***If power does not remain on when TRYCLOPS X – Purge Controller, XP Version maintenance switch is returned to Normal Operations position, check for the following possible problems.***

- ***Purge pressure(s) is set too low at the pressure regulator.***
- ***Electronics enclosure door(s) is open or allowing too much leakage.***
- ***Flow(s) from exhaust port has become restricted or blocked.***

(*Normal Operation Mode*) Automatic Leakage Compensation Maintenance or Service Procedure:

The following procedure should be performed when using the TRYCLOPS X – Purge Controller, XP Version's maintenance switch to perform maintenance or service on any system in ***Normal Operation Mode*** using an Automatic Leakage Compensation Purge Gas Inlet Kit for any purged electrical equipment that uses the TRYCLOPS X – Purge Controller, XP Version to monitor and control the electrical equipment enclosure(s) purge pressure and power.

WARNING: ***Failure to heed the following, information may lead to injury to personnel or equipment damage.***

CAUTION: ***Do not open the electrical equipment enclosure(s) in a hazardous area even when de-energized unless area has been properly tested and is known to not contain explosive materials.***

WARNING: ***Applicable permits must be obtained and appropriate precautions must be taken to prevent possible injury to personnel or equipment damage when using the TRYCLOPS X – Purge Controller, XP Version's maintenance switch.***

WARNING: ***Placing the TRYCLOPS X – Purge Controller, XP Version into Maintenance position disables safe operation of the system. Maintenance mode is to be used ONLY when required for maintenance or service AND ONLY if area is known to be non-hazardous.***

CAUTION: ***Electrical equipment components may be hot even when power is not applied. Take appropriate precautions to prevent injury from contact with hot items.***

NOTE: ***If required the TRYCLOPS X – Purge Controller, XP Version's maintenance switch can be set to Maintenance position to provide power to the electrical equipment mounted in the electrical enclosure(s) the TRYCLOPS X – Purge Controller, XP Version is monitoring while the enclosure door(s) is open. When the maintenance switch is in the maintenance position, the safety power shut off function is disabled! Do not place the maintenance switch in the maintenance position unless it is absolutely necessary and the area is known to be non-hazardous. As soon as maintenance or service is complete, the maintenance switch MUST be placed in the Normal Operation position.***

Step 1:

If maintenance or service must be performed with power applied to the electrical equipment mounted within the purged enclosure(s) the TRYCLOPS X – Purge Controller, XP Version is monitoring, first make sure that area-surrounding the electronics enclosure(s), which the TRYCLOPS X – Purge Controller, XP Version is monitoring and controlling is known to be non-hazardous.

Step 2:

After it has been established that the area surrounding the electronics enclosure(s) is non-hazardous, unscrew the cover over the TRYCLOPS X – Purge Controller, XP Version's maintenance switch. Insert key and turn switch to the Maintenance position. ***Maintenance switch key can only be removed from maintenance switch in Normal Operation position and cover cannot be screwed back on until key is removed from switch.*** This means, that the maintenance switch key must remain in the switch while maintenance or service is being performed. When the TRYCLOPS X – Purge Controller, XP Version is in maintenance mode the indicator light will begin blinking red and, if connected, a remote alarm will be sent.

Step 3:

With the TRYCLOPS X – Purge Controller, XP Version in maintenance mode, turn off purge supply gas at the shut off valve. ***Not at the Automatic Leakage Compensation Purge Gas Inlet Kit pressure regulator. The Automatic Leakage Compensation Purge Gas Inlet Kit pressure regulator setting should remain the same to keep the purge gas CFM (LPM) the same as what was established during the initial automatic dilution time set up.***

WARNING: Do not leave the electrical equipment unattended while the TRYCLOPS X – Purge Controller, XP Version is in maintenance switch is in the Maintenance position. Personnel must remove power from the electrical system IMMEDIATELY if hazardous conditions are suspected.

Step 4:

With protective gas supply off at the shut off valve, open electronics enclosure door(s).

CAUTION: Electrical equipment components may be hot even when power is not applied. Take appropriate precautions to prevent injury from contact with hot items.

Step 5:

With all electronics enclosure door(s) opened and the TRYCLOPS X – Purge Controller, XP Version in maintenance mode applying power to the electronics, perform required maintenance or service.

Step 6:

After maintenance or service has been performed and completed, properly close and latch all open electronics enclosure doors.

Step 7:

After electronic enclosure door(s) have been properly closed and latched, turn on purge supply gas at the shut off valve. ***Not at the Automatic Leakage Compensation Purge Gas Inlet Kit pressure regulator. The Automatic Leakage Compensation Purge Gas Inlet Kit pressure regulator setting should remain the same to keep the purge gas CFM (LPM) the same as what was established during the initial automatic dilution time set up.***

Step 8:

With electronics enclosure door(s) latched and purge supply gas turned on at the shut off valve, return TRYCLOPS X – Purge Controller, XP Version maintenance switch to the Normal Operation position. After the maintenance switch has been returned to the Normal Operations position and the following conditions are being met. The monitored enclosure pressure(s) is being maintained above 0.30 inch H2O (0.75 mbar) for explosive gas hazardous areas, 0.50 inch H2O (1.25 mbar) for combustible dust hazardous areas and enclosure exhaust port is registering proper flow(s), the TRYCLOPS X – Purge Controller, XP Version will go from a light blinking red to a steady state of green and power will remain connected through the TRYCLOPS X – Purge Controller, XP Version to the electrical equipment within the purged enclosure(s).

Step 9:

After TRYCLOPS X – Purge Controller, XP Version's maintenance switch has been returned to Normal Operations position, remove key and screw maintenance switch cover back on as before.

NOTE: ***If power does not remain on when TRYCLOPS X – Purge Controller, XP Version maintenance switch is returned to Normal Operations position, check for the following possible problems.***

- ***Purge pressure(s) is set too low at the pressure regulator.***
- ***Electronics enclosure door(s) is open or allowing too much leakage.***
- ***Flow(s) from exhaust port has become restricted or blocked.***

(Continuous Dilution) Power Disconnect By-Pass Switch Mode Maintenance or Service Procedure:

The following procedure should be performed when using the TRYCLOPS X – Purge Controller, XP Version's maintenance switch to perform maintenance or service on any system in ***Power Disconnect By-Pass Switch Mode*** using a Continuous Dilution Purge Gas Inlet Kit for any purged electrical equipment that uses the TRYCLOPS X – Purge Controller, XP Version to monitor and control the electrical equipment enclosure(s) purge pressure and power.

WARNING: ***Failure to heed the following, information may lead to injury to personnel or equipment damage.***

CAUTION: ***Do not open the electrical equipment enclosure(s) in a hazardous area even when de-energized unless area has been properly tested and is known to not contain explosive materials.***

WARNING: ***Applicable permits must be obtained and appropriate precautions must be taken to prevent possible injury to personnel or equipment damage when using the TRYCLOPS X – Purge Controller, XP Version's maintenance switch.***

WARNING: ***Placing the TRYCLOPS X – Purge Controller, XP Version into Maintenance position disables safe operation of the system. Maintenance mode is to be used ONLY when required for maintenance or service AND ONLY if area is known to be non-hazardous.***

CAUTION: ***Electrical equipment components may be hot even when power is not applied. Take appropriate precautions to prevent injury from contact with hot items.***

NOTE: ***If required the TRYCLOPS X – Purge Controller, XP Version's maintenance switch can be set to Maintenance position to provide power to the electrical equipment mounted in the electrical enclosure(s) the TRYCLOPS X – Purge Controller, XP Version is monitoring while the enclosure door(s) is open. When the maintenance switch is in the maintenance position, the safety power shut off function is disabled! Do not place the maintenance switch in the maintenance position unless it is absolutely necessary and the area is known to be non-hazardous. As soon as maintenance or service is complete, the maintenance switch MUST be placed in the Normal Operation position.***

Step 1:

If maintenance or service must be performed with power applied to the electrical equipment mounted within the purged enclosure(s) the TRYCLOPS X – Purge Controller, XP Version is monitoring, first make sure that area-surrounding the electronics enclosure(s), which the TRYCLOPS X – Purge Controller, XP Version is monitoring and controlling is known to be non-hazardous.

Step 2:

After it has been established that the area surrounding the electronics enclosure(s) is non-hazardous, unscrew the cover over the TRYCLOPS X – Purge Controller, XP Version's maintenance switch. Insert key and turn switch to the Maintenance position. ***Maintenance switch key can only be removed from maintenance switch in Normal Operation position and cover cannot be screwed back on until key is removed from switch.*** This means, that the maintenance switch key must remain in the switch while maintenance or service is being performed. When the TRYCLOPS X – Purge Controller, XP Version is in maintenance mode the indicator light will begin blinking red and, if connected, a remote alarm will be sent.

Step 3:

With the TRYCLOPS X – Purge Controller, XP Version in maintenance mode, turn off purge supply gas at the shut off valve. ***Not at the Continuous Dilution Purge Gas Inlet Kit pressure regulator. The Continuous Dilution Purge Gas Inlet Kit pressure regulator setting should remain the same to keep the purge gas CFM (LPM) the same as what was established during the initial automatic dilution time set up.***

WARNING: Do not leave the electrical equipment unattended while the TRYCLOPS X – Purge Controller, XP Version is in maintenance switch is in the Maintenance position. Personnel must remove power from the electrical system IMMEDIATELY if hazardous conditions are suspected.

Step 4:

With protective gas supply off at the shut off valve, open electronics enclosure doors(s).

CAUTION: Electrical equipment components may be hot even when power is not applied. Take appropriate precautions to prevent injury from contact with hot items.

Step 5:

With electronics enclosure door(s) opened and the TRYCLOPS X – Purge Controller, XP Version in maintenance mode applying power to the electronics, perform required maintenance or service.

Step 6:

After maintenance or service has been performed and completed, properly close and latch all open electronics enclosure doors.

Step 7:

After electronics enclosure door(s) has been properly closed and latched, turn on purge supply gas at the shut off valve located on Continuous Dilution Purge Gas Inlet Kit manifold block. ***Not at the Continuous Dilution Purge Gas Inlet Kit pressure regulator. The Continuous Dilution Purge Gas Inlet Kit pressure regulator setting should remain the same to keep the purge gas CFM (LPM) the same as what was established during the initial automatic dilution time set up.***

Step 8:

With electronics enclosure door(s) latched and purge supply gas turned on at the shut off valve, return TRYCLOPS X – Purge Controller, XP Version maintenance switch to the Normal Operation position. After the maintenance switch has been returned to the Normal Operations position and the following conditions are being met. The monitored electronics enclosure pressure(s) is being maintained above 0.30 inch H2O (0.75 mbar) for explosive gas hazardous areas, 0.50 inch H2O (1.25 mbar) for combustible dust hazardous areas and enclosure exhaust port(s) is registering proper flow(s), the TRYCLOPS X – Purge Controller, XP Version will go from a light blinking red to a steady state of green and power will remain connected through the TRYCLOPS X – Purge Controller, XP Version to the electrical equipment within the purged enclosure(s).

Step 9:

After TRYCLOPS X – Purge Controller, XP Version's maintenance switch has been returned to Normal Operations position, remove key and screw maintenance switch cover back on as before.

NOTE: ***If power does not remain on when TRYCLOPS X – Purge Controller, XP Version maintenance switch is returned to Normal Operations position, check for the following possible problems.***

- ***Purge pressure(s) is set too low at the pressure regulator.***
- ***Electronics enclosure door(s) is open or allowing too much leakage.***
- ***Flow(s) from exhaust port has become restricted or blocked.***

(Automatic Leakage Compensation) Power Disconnect By-Pass Switch Mode Maintenance or Service Procedure:

The following procedure should be performed when using the TRYCLOPS X – Purge Controller, XP Version's maintenance switch to perform maintenance or service on any system in ***Power Disconnect By-Pass Switch Mode*** using an Automatic Leakage Compensation Purge Gas Inlet Kit for any purged electrical equipment that uses the TRYCLOPS X – Purge Controller, XP Version to monitor and control the electrical equipment enclosure(s) purge pressure and power.

WARNING: ***Failure to heed the following, information may lead to injury to personnel or equipment damage.***

CAUTION: ***Do not open the electrical equipment enclosure(s) in a hazardous area even when de-energized unless area has been properly tested and is known to not contain explosive materials.***

WARNING: ***Applicable permits must be obtained and appropriate precautions must be taken to prevent possible injury to personnel or equipment damage when using the TRYCLOPS X – Purge Controller, XP Version's maintenance switch.***

WARNING: ***Placing the TRYCLOPS X – Purge Controller, XP Version into Maintenance position disables safe operation of the system. Maintenance mode is to be used ONLY when required for maintenance or service AND ONLY if area is known to be non-hazardous.***

CAUTION: ***Electrical equipment components may be hot even when power is not applied. Take appropriate precautions to prevent injury from contact with hot items.***

NOTE: ***If required the TRYCLOPS X – Purge Controller, XP Version's maintenance switch can be set to Maintenance position to provide power to the electrical equipment mounted in the electrical enclosure(s) the TRYCLOPS X – Purge Controller, XP Version is monitoring while the enclosure door(s) is open. When the maintenance switch is in the maintenance position, the safety power shut off function is disabled! Do not place the maintenance switch in the maintenance position unless it is absolutely necessary and the area is known to be non-hazardous. As soon as maintenance or service is complete, the maintenance switch MUST be placed in the Normal Operation position.***

Step 1:

If maintenance or service must be performed with power applied to the electrical equipment mounted within the purged enclosure(s) the TRYCLOPS X – Purge Controller, XP Version is monitoring, first make sure that area-surrounding the electronics enclosure(s), which the TRYCLOPS X – Purge Controller, XP Version is monitoring and controlling is known to be non-hazardous.

Step 2:

After it has been established that the area surrounding the electronics enclosure (s) is non-hazardous, unscrew the cover over the TRYCLOPS X – Purge Controller, XP Version's maintenance switch. Insert key and turn switch to the Maintenance position. ***Maintenance switch key can only be removed from maintenance switch in Normal Operation position and cover cannot be screwed back on until key is removed from switch.*** This means, that the maintenance switch key must remain in the switch while maintenance or service is being performed. When the TRYCLOPS X – Purge Controller, XP Version is in maintenance mode the indicator light will begin blinking red and, if connected, a remote alarm will be sent.

Step 3:

With the TRYCLOPS X – Purge Controller, XP Version in maintenance mode, turn off purge supply gas at the shut off valve. ***Not at the Automatic Leakage Compensation Purge Gas Inlet Kit pressure regulator. The Automatic Leakage Compensation Purge Gas Inlet Kit pressure regulator setting should remain the same to keep the purge gas CFM (LPM) the same as what was established during the initial automatic dilution time set up.***

WARNING: Do not leave the electrical equipment unattended while the TRYCLOPS X – Purge Controller, XP Version is in maintenance switch is in the Maintenance position. Personnel must remove power from the electrical system IMMEDIATELY if hazardous conditions are suspected.

Step 4:

With protective gas supply off at the shut off valve, open electronics enclosure door(s).

CAUTION: Electrical equipment components may be hot even when power is not applied. Take appropriate precautions to prevent injury from contact with hot items.

Step 5:

With electronics enclosure door(s) opened and the TRYCLOPS X – Purge Controller, XP Version in maintenance mode applying power to the electronics, perform required maintenance or service.

Step 6:

After maintenance or service has been performed and completed, properly close and latch all open electronics enclosure doors.

Step 7:

After electronics enclosure door(s) have been properly closed and latched, turn on purge supply gas at the shut off valve. ***Not at the Automatic Leakage Compensation Purge Gas Inlet Kit pressure regulator. The Automatic Leakage Compensation Purge Gas Inlet Kit pressure regulator setting should remain the same to keep the purge gas CFM (LPM) the same as what was established during the initial automatic dilution time set up.***

Step 8:

With electronics enclosure door(s) latched and purge supply gas turned on at the shut off valve, return TRYCLOPS X – Purge Controller, XP Version maintenance switch to the Normal Operation position. After the maintenance switch has been returned to the Normal Operations position and the following conditions are being met. The monitored enclosure pressure(s) is being maintained above 0.30 inch H2O (0.75 mbar) for explosive gas hazardous areas, 0.50 inch H2O (1.25 mbar) for combustible dust hazardous areas and enclosure exhaust port(s) is registering proper flow(s), the TRYCLOPS X – Purge Controller, XP Version will go from a light blinking red to a steady state of green and power will remain connected through the TRYCLOPS X – Purge Controller, XP Version to the electrical equipment within the purged enclosure(s).

Step 9:

After TRYCLOPS X – Purge Controller, XP Version's maintenance switch has been returned to Normal Operations position, remove key and screw maintenance switch cover back on as before.

NOTE: ***If power does not remain on when TRYCLOPS X – Purge Controller, XP Version maintenance switch is returned to Normal Operations position, check for the following possible problems.***

- ***Purge pressure(s) is set too low at the pressure regulator.***
- ***Electronics enclosure door(s) is open or allowing too much leakage.***
- ***Flow(s) from exhaust port has become restricted or blocked.***

Section 6

Documents

Installation Flow Diagram:

NOTE: ***Purge / Pressurization Systems Recommended Connections for Single Enclosure are as follows:***

1. Purge / pressurization system should be installed for best ease of viewing any system pressure gauges and / or visual alarms.

2. All tubing, piping and fittings should be selected and used that are suitable for the location they will be installed, used and protected from damage.

3. No valves shall be installed between the purge / pressurization system and enclosure.

4. Always refer to proper ATEX, CEC, IECEx, NEC and NFPA standards for proper installation and required tests for certification of any complete purge / pressurization system installed on enclosure.

NOTE: ***Purge / Pressurization Systems Recommended Connections for Multiple Enclosures in Series will include the recommendations for single enclosure plus the following:***

1. Enclosures in series should be connected from smallest to largest enclosure.

2. Connections between enclosures should be properly sized to allow proper operation of purge / pressurization system and proper purge gas flow through enclosures.

3. Conduit and wire ways can be utilized as protected enclosures or as connections between enclosures, as such volumes of conduit or wire ways should be added to overall volume to be diluted before power can be applied.

NOTE: ***Purge / Pressurization Systems Recommended Enclosure Installation for Hazardous Areas with Flammable Gasses or Vapors that are Lighter than Air are as follows:***

1. The purge gas inlet supply connection should enter the enclosure near the bottom corner of the enclosure.

2. As such the enclosure exhaust vent should be installed near an extreme opposite top corner of the enclosure.

3. Refer to drawing number DO-30015-E-1 for illustration of lighter than air single point monitoring of up to three enclosures flow diagram.

4. Refer to drawing number DO-30015-E-2 for illustration of lighter than air multiple in series enclosures flow diagram.

Installation Flow Diagrams (Continued):

***NOTE:* Purge / Pressurization Systems Recommended Enclosure Installation for Hazardous Areas with Flammable Gasses or Vapors that are Heavier than Air are as follows:**

1. The purge gas inlet supply connection should enter the enclosure near the top corner of the enclosure.

2. As such the enclosure exhaust vent should be installed near an extreme opposite bottom corner of the enclosure.

3. Refer to drawing number DO-30015-E-3 for illustration of heavier than air single point monitoring of up to three enclosures flow diagram.

4. Refer to drawing number DO-30015-E-4 for illustration of heavier than air multiple in series enclosures flow diagram.

Page 66 - Helpful in selecting optimal location for mounting the TRYCLOPS X – Purge Controller, XP Version on single point monitoring for up to three enclosure applications with respect to the position of the purge system components for lighter than air hazardous materials.

Page 67 - Helpful in selecting optimal location for mounting the TRYCLOPS X – Purge Controller, XP Version on multiple enclosures in series applications with respect to the position of the purge system components for lighter than air hazardous materials.

Page 68 - Helpful in selecting optimal location for mounting the TRYCLOPS X – Purge Controller, XP Version on single point monitoring for up to three enclosure applications with respect to the position of the purge system components for heavier than air hazardous materials.

Page 69 - Helpful in selecting optimal location for mounting the TRYCLOPS X – Purge Controller, XP Version on multiple enclosures in series applications with respect to the position of the purge system components for heavier than air hazardous materials.

Exhaust Vent Configurations:

Pages 70, 71, and 72 – Are drawings showing the three (3) different small exhaust vent configurations for enclosures with volumes up to 15 cubic feet (425 liters). The components provided for the purge exhaust vent(s) and how they can be assembled is also illustrated. Use this after determining the optimal location for the TRYCLOPS X – Purge Controller, XP Version.

Exhaust Vent Configurations (Continued):

Pages 73, 74, and 75 – Are drawings showing the three (3) different medium exhaust vent configurations for enclosures with volumes up to 75 cubic feet (2,125 liters). The components provided for the purge exhaust vent(s) and how they can be assembled is also illustrated. Use this after determining the optimal location for the TRYCLOPS X – Purge Controller, XP Version.

Pages 76, 77, and 78 – Are drawings showing the three (3) different large exhaust vent configurations for enclosures with volumes up to 200 cubic feet (5,663 liters). The components provided for the purge exhaust vent(s) and how they can be assembled is also illustrated. Use this after determining the optimal location for the TRYCLOPS X – Purge Controller, XP Version.

Installation General Assemblies:

Pages 79, 80, and 81 – Are dimensioned drawing for creating a (1 to 1) scale drawing, helpful in transferring the position of the necessary mounting holes. Use this after determining the optimal location for the TRYCLOPS X – Purge Controller, XP Version.

Wiring Diagrams:

Page 82 - This drawing details the correct power and dry contact alarm-wiring hookup for a 115 VAC unit.

Page 83 - This drawing details the correct power and dry contact alarm-wiring hookup for a 230 VAC unit.

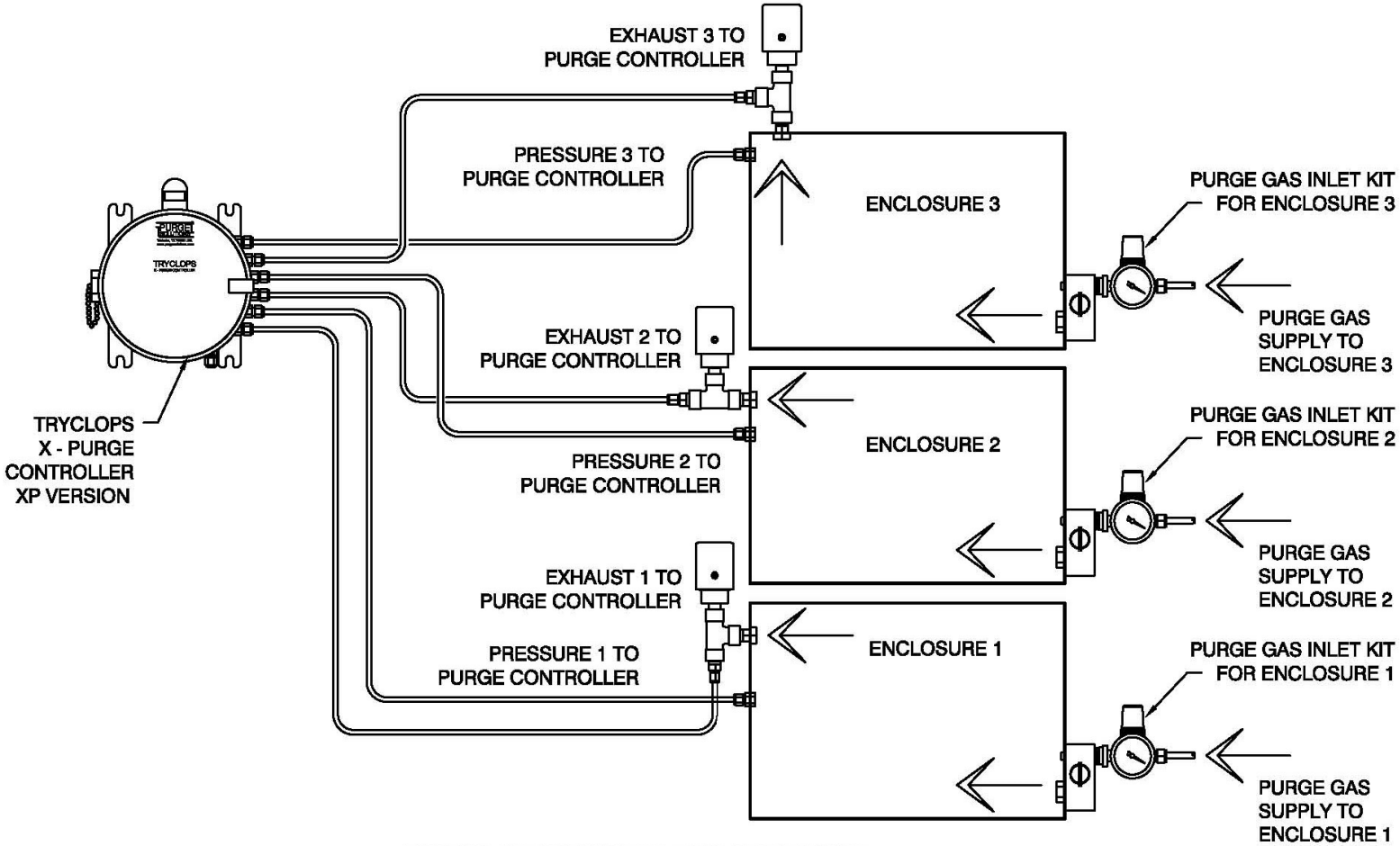

DILUTION PATH OF LIGHTER THAN AIR EXPLOSIVE
MATERIALS THROUGH SINGLE POINT MONITORED ENCLOSURES

REV #	ECO #	CHANGE(S) DESCRIPTION	DATE	CHANGE BY	APPD BY

The contents of this drawing is the sole property of Purge Solutions. This print and/or its contents shall not be traced or reproduced without prior written permission from Purge Solutions. It shall not be used directly or indirectly in any way detrimental to the interest of Purge Solutions.

DO NOT SCALE DRAWING
UNLESS OTHERWISE SPECIFIED-
Dimensions Are In Inches
Dimensions In () Are In mm
Tolerances: .X = ± 0.015
.XX = ± 0.010
.XXX = ± 0.005
Angular = ±0.5°
Break All Sharp Edges
63 Minimum Except As Noted

DRAWN: WJT
DATE: 22/SEP/03
CHECKED: WJT
DATE: 22/SEP/03
APPROVED: WJT
DATE: 22/SEP/03

TITLE: FLOW FOR LIGHTER THAN AIR HAZARDOUS MATERIALS
TRYCLOPS X - PURGE CONTROLLER, SINGLE POINT MONITORING

PART & DWG #: DO-30015-E-1
MATERIAL: NOTED
SHEET 1 OF 4
SCALE: N/A
DWG SIZE A
FINISH: N/A

PURGE SOLUTIONS®
WEBSTER, TEXAS, USA
832-368-7166

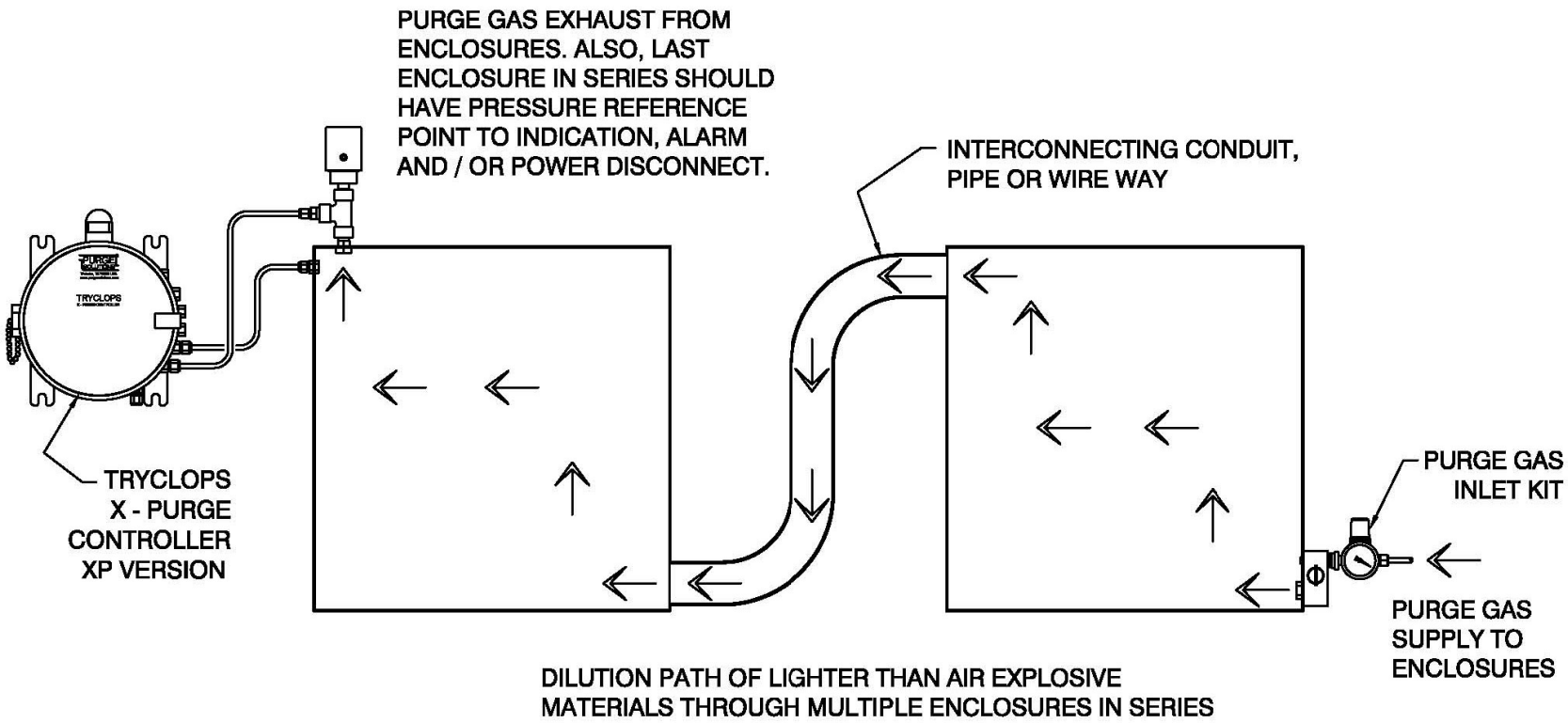

DILUTION PATH OF LIGHTER THAN AIR EXPLOSIVE MATERIALS THROUGH MULTIPLE ENCLOSURES IN SERIES

REV #	ECO #	CHANGE(S) DESCRIPTION	DATE	CHANGE BY	APPD BY

The contents of this drawing is the sole property of Purge Solutions. This print and/or its contents shall not be traced or reproduced without prior written permission from Purge Solutions. It shall not be used directly or indirectly in any way detrimental to the interest of Purge Solutions.

DO NOT SCALE DRAWING
UNLESS OTHERWISE SPECIFIED-
Dimensions Are in Inches
Dimensions in () Are in mm
Tolerances: .X = ± 0.015
.XX = ± 0.010
.XXX = ± 0.005
Angular = ±0.5°
Break All Sharp Edges
63 Minimum Except As Noted

DRAWN: WJT
DATE: 22/SEP/03
CHECKED: WJT
DATE: 22/SEP/03
APPROVED: WJT
DATE: 22/SEP/03

TITLE: FLOW FOR LIGHTER THAN AIR HAZARDOUS MATERIALS TRYCLOPS X - PURGE CONTROLLER, MULTIPLE IN SERIES

PART & DWG #: DO-30015-E-2
MATERIAL: NOTED
SHEET 2 OF 4
SCALE: N/A
DWG SIZE A
FINISH: N/A

PURGE SOLUTIONS®
WEBSTER, TEXAS, USA
832-368-7166

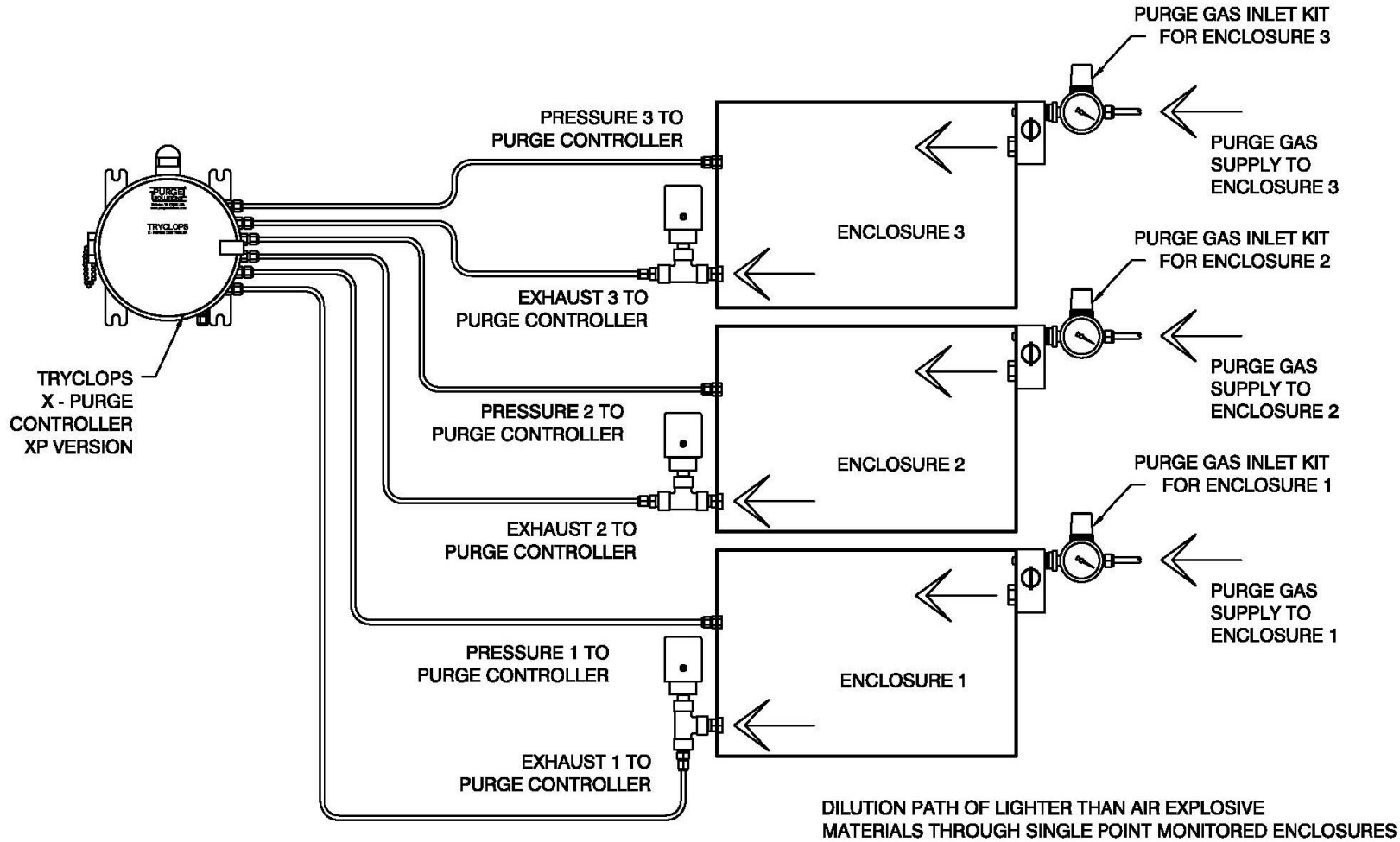

DILUTION PATH OF LIGHTER THAN AIR EXPLOSIVE MATERIALS THROUGH SINGLE POINT MONITORED ENCLOSURES

REV #	ECO #	CHANGE(S) DESCRIPTION	DATE	CHANGE BY	APPD BY

The contents of this drawing is the sole property of Purge Solutions. This print and/or its contents shall not be traced or reproduced without prior written permission from Purge Solutions. It shall not be used directly or indirectly in any way detrimental to the interest of Purge Solutions.

DO NOT SCALE DRAWING
UNLESS OTHERWISE SPECIFIED-
Dimensions Are in Inches
Dimensions in ( ) Are in mm
Tolerances: .X = ± 0.015
.XX = ± 0.010
.XXX = ± 0.005
Angular = ±0.5°
Break All Sharp Edges
63 Minimum Except As Noted

DRAWN: WJT
DATE: 22/SEP/03
CHECKED: WJT
DATE: 22/SEP/03
APPROVED: WJT
DATE: 22/SEP/03

TITLE: FLOW FOR HEAVIER THAN AIR HAZARDOUS MATERIALS
TRYCLOPS X - PURGE CONTROLLER, ENCLOSURES IN SERIES

PART & DWG #: DO-30015-E-3
MATERIAL: NOTED
SHEET 3 OF 4
SCALE: N/A
DWG SIZE A
FINISH: N/A

PURGE SOLUTIONS®
WEBSTER, TEXAS, USA
832-368-7166

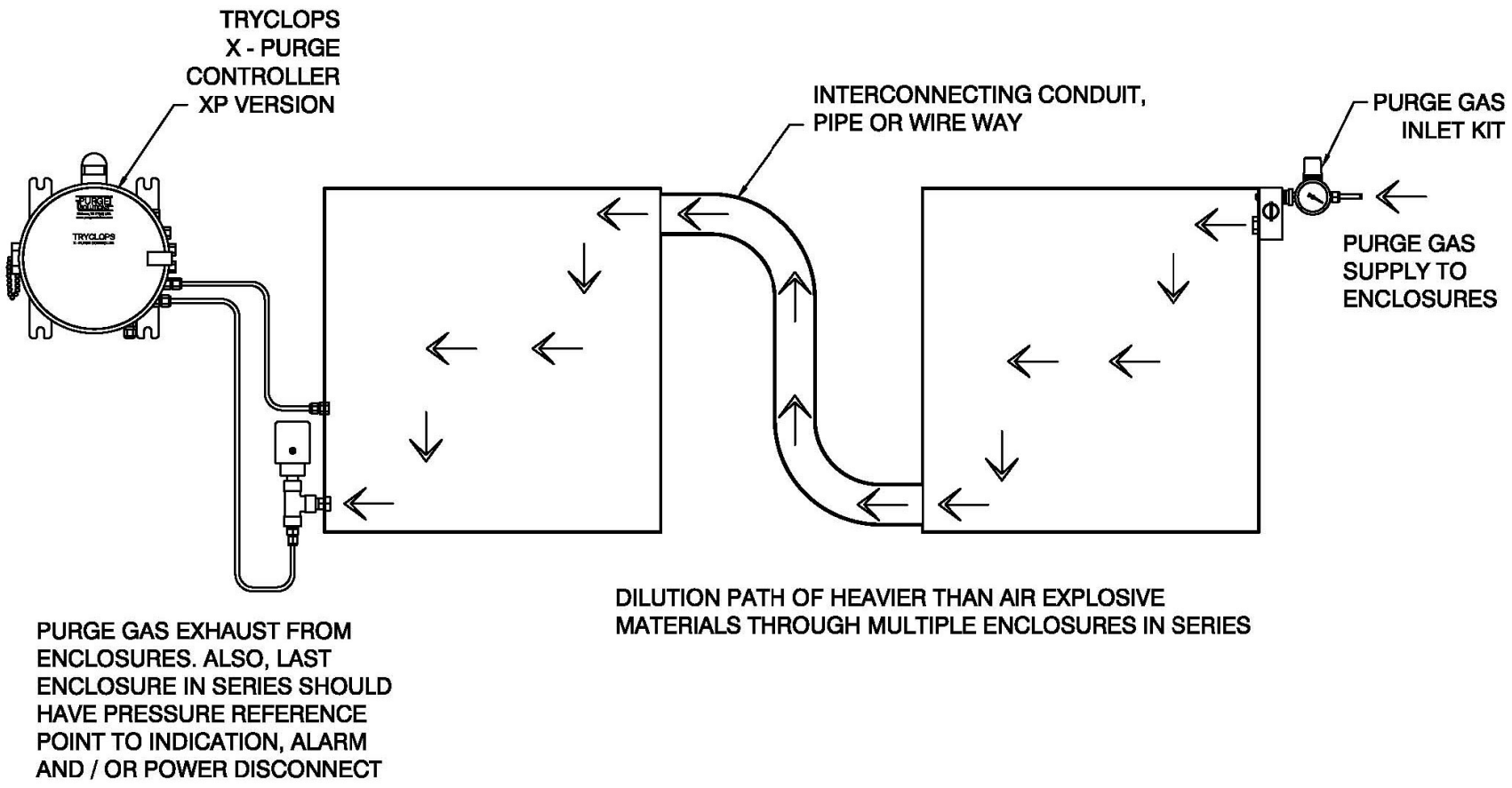

REV #	ECO #	CHANGE(S) DESCRIPTION	DATE	CHANGE BY	APPD BY

The contents of this drawing is the sole property of Purge Solutions. This print and/or its contents shall not be traced or reproduced without prior written permission from Purge Solutions. It shall not be used directly or indirectly in any way detrimental to the interest of Purge Solutions.

DO NOT SCALE DRAWING
UNLESS OTHERWISE SPECIFIED-
Dimensions Are In Inches
Dimensions In () Are In mm
Tolerances: .X = ± 0.015
.XX = ± 0.010
.XXX = ± 0.005
Angular = ±0.5°
Break All Sharp Edges
63 Minimum Except As Noted

DRAWN: WJT
DATE: 22/SEP/03
CHECKED: WJT
DATE: 22/SEP/03
APPROVED: WJT
DATE: 22/SEP/03

TITLE: FLOW FOR HEAVIER THAN AIR HAZARDOUS MATERIALS
TRYCLOPS X - PURGE CONTROLLER, MULTIPLE IN SERIES

PART & DWG #: DO-30015-E-4
MATERIAL: NOTED
SHEET 4 OF 4
SCALE: N/A
DWG SIZE A
FINISH: N/A

PURGE SOLUTIONS®
WEBSTER, TEXAS, USA
832-368-7166

NOTES:

1. REQUIRED HOLE THRU ENCLOSURE WALL FOR VENT IS 0.57Ø (14.48Ø)

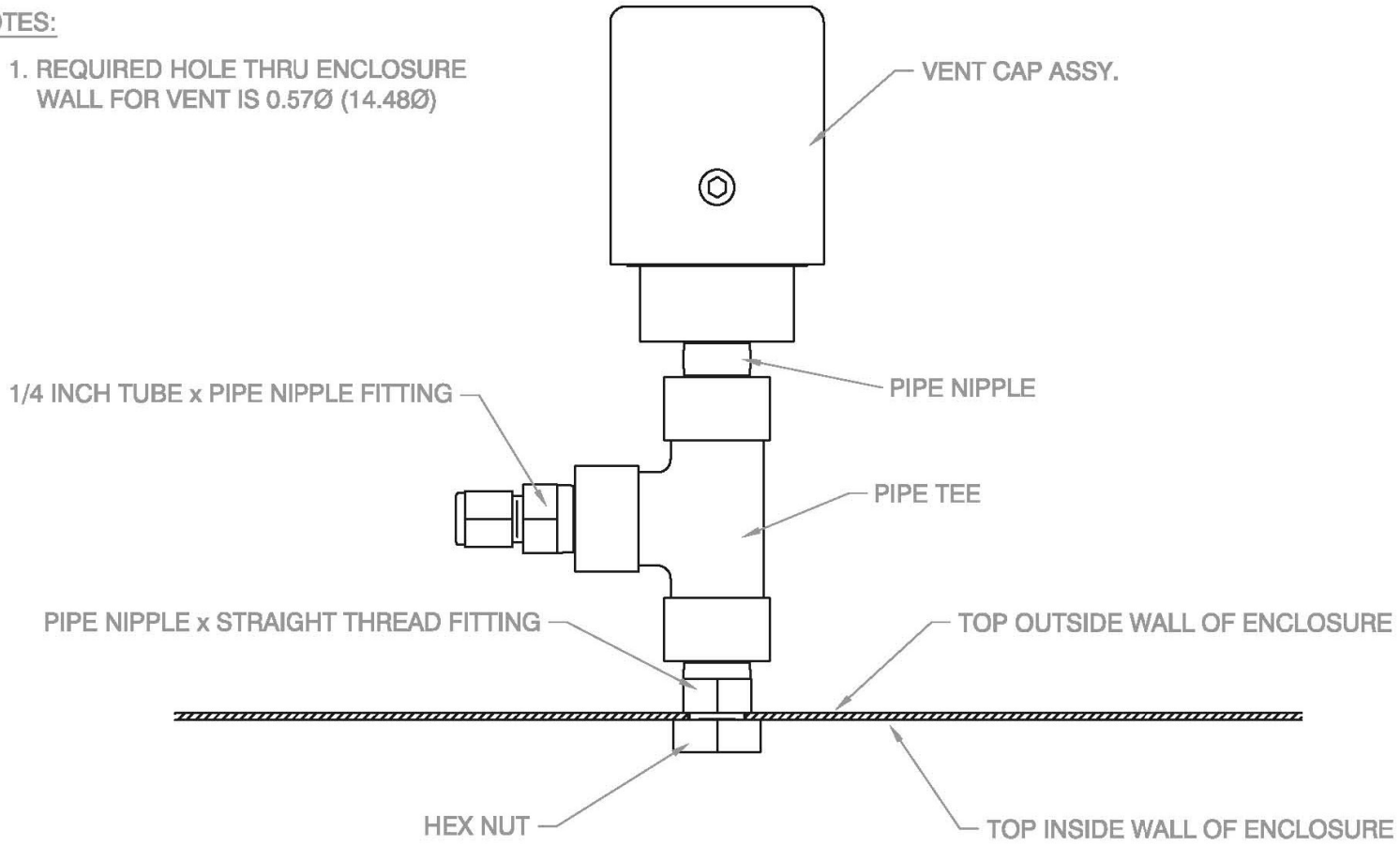

REV #	ECO #	CHANGE(S) DESCRIPTION	DATE	CHANGE BY	APPD BY

The contents of this drawing is the sole property of Purge Solutions. This print and/or its contents shall not be traced or reproduced without prior written permission from Purge Solutions. It shall not be used directly or indirectly in any way detrimental to the interest of Purge Solutions.

DO NOT SCALE DRAWING
UNLESS OTHERWISE SPECIFIED-
Dimensions Are in Inches
Dimensions in ( ) Are in mm
Tolerances: .X = ± 0.015
.XX = ± 0.010
.XXX = ± 0.005
Angular = ±0.5°
Break All Sharp Edges
63 Minimum Except As Noted

DRAWN: WJT
DATE: 02/JAN/04
CHECKED: WJT
DATE: 02/JAN/04
APPROVED: WJT
DATE: 02/JAN/04

TITLE: SMALL PURGE VENT TOP MOUNT ASSEMBLY
TRYCLOPS X - PURGE CONTROLLER

PART & DWG #: DO-11068-B
MATERIAL: NOTED
SHEET 1 OF 1
SCALE: N/A
DWG SIZE A
FINISH: N/A

PURGE SOLUTIONS®
WEBSTER, TEXAS, USA
832-368-7166

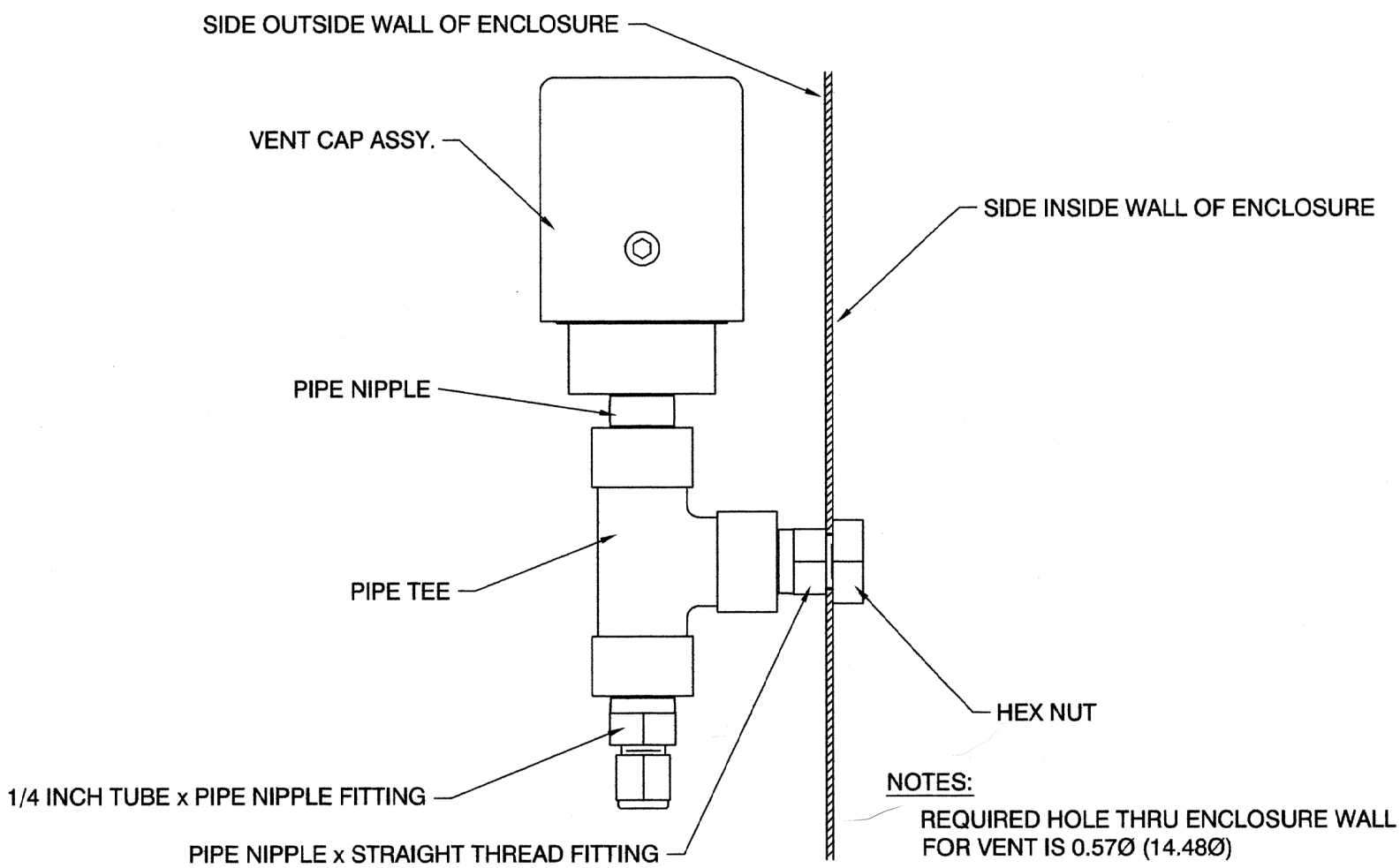

NOTES:

REQUIRED HOLE THRU ENCLOSURE WALL FOR VENT IS 0.57Ø (14.48Ø)

REV #	ECO #	CHANGE(S) DESCRIPTION	DATE	CHANGE BY	APPD BY

The contents of this drawing is the sole property of Purge Solutions. This print and/or its contents shall not be traced or reproduced without prior written permission from Purge Solutions. It shall not be used directly or indirectly in any way detrimental to the interest of Purge Solutions.

DO NOT SCALE DRAWING
UNLESS OTHERWISE SPECIFIED-
Dimensions Are In Inches
Dimensions In ( ) Are In mm
Tolerances: .X = ± 0.015
.XX = ± 0.010
.XXX = ± 0.005
Angular = ±0.5°
Break All Sharp Edges
63 Minimum Except As Noted

DRAWN: WJT
DATE: 02/JAN/04
CHECKED: WJT
DATE: 02/JAN/04
APPROVED: WJT
DATE: 02/JAN/04

TITLE: SMALL PURGE VENT SIDE MOUNT ASSEMBLY ONE TRYCLOPS X - PURGE CONTROLLER

PART & DWG #: DO-11069-B
MATERIAL: NOTED
SHEET 1 OF 1
SCALE: N/A
DWG SIZE A
FINISH: N/A

PURGE SOLUTIONS®
WEBSTER, TEXAS, USA
832-368-7166

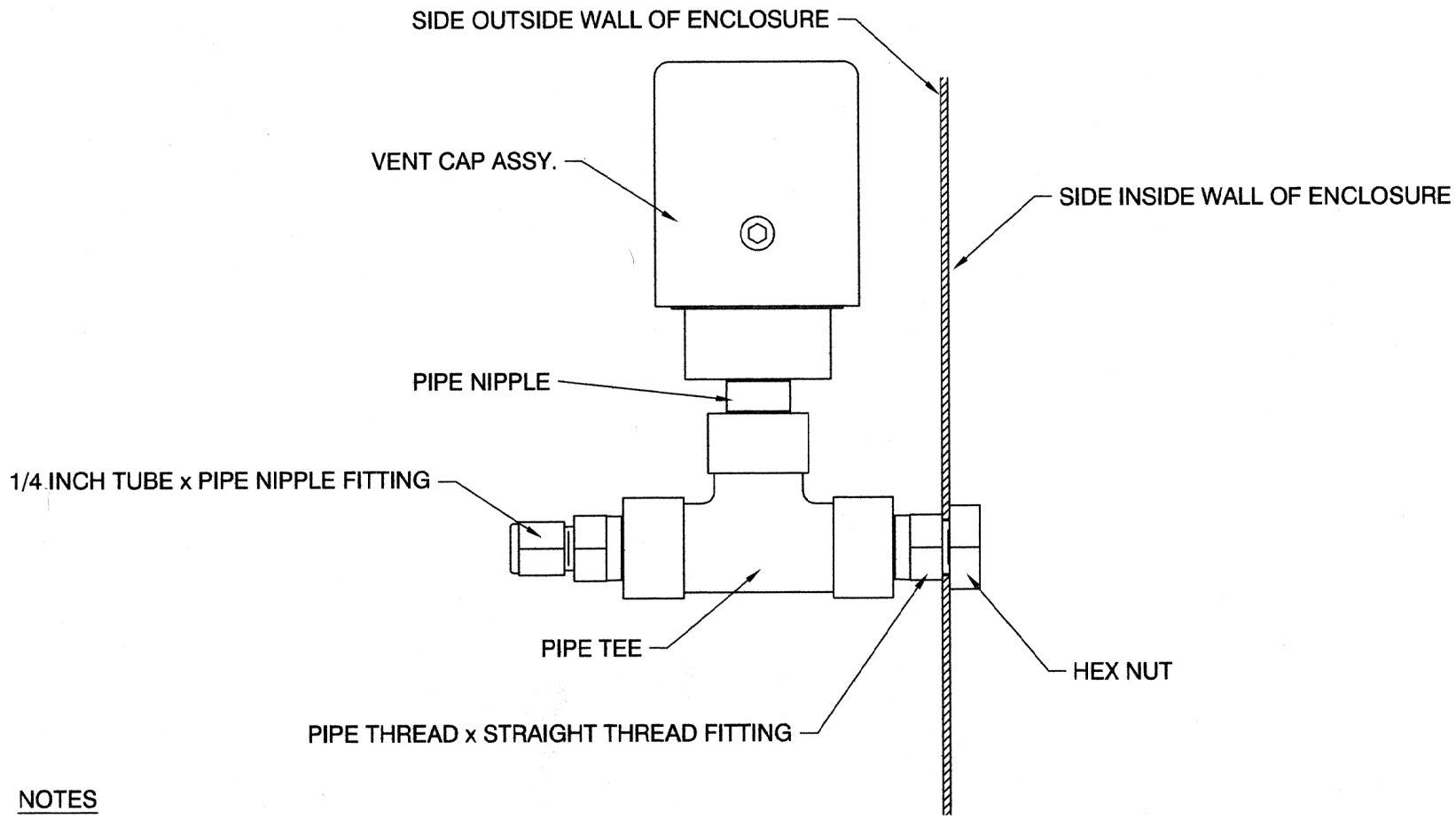

NOTES

1. REQUIRED HOLE THRU ENCLOSURE WALL FOR VENT IS 0.57 (14.48Ø)

REV #	ECO #	CHANGE(S) DESCRIPTION	DATE	CHANGE BY	APPD BY

The contents of this drawing is the sole property of Purge Solutions. This print and/or its contents shall not be traced or reproduced without prior written permission from Purge Solutions. It shall not be used directly or indirectly in any way detrimental to the interest of Purge Solutions.

DO NOT SCALE DRAWING
UNLESS OTHERWISE SPECIFIED-
Dimensions Are In Inches
Dimensions In ( ) Are In mm
Tolerances: .X = ± 0.015
.XX = ± 0.010
.XXX = ± 0.005
Angular = ±0.5°
Break All Sharp Edges
63 Minimum Except As Noted

DRAWN: WJT
DATE: 02/JAN/04
CHECKED: WJT
DATE: 02/JAN/04
APPROVED: WJT
DATE: 02/JAN/04

TITLE: SMALL PURGE VENT SIDE MOUNT ASSEMBLY TWO TRYCLOPS X - PURGE CONTROLLER

PART & DWG #: DO-11070-B
MATERIAL: NOTED
SHEET 1 OF 1
SCALE: N/A
DWG SIZE A
FINISH: N/A

PURGE SOLUTIONS®
WEBSTER, TEXAS, USA
832-368-7166

NOTES:

1. REQUIRED HOLE THRU ENCLOSURE WALL FOR VENT IS 1.31Ø (33.3Ø)

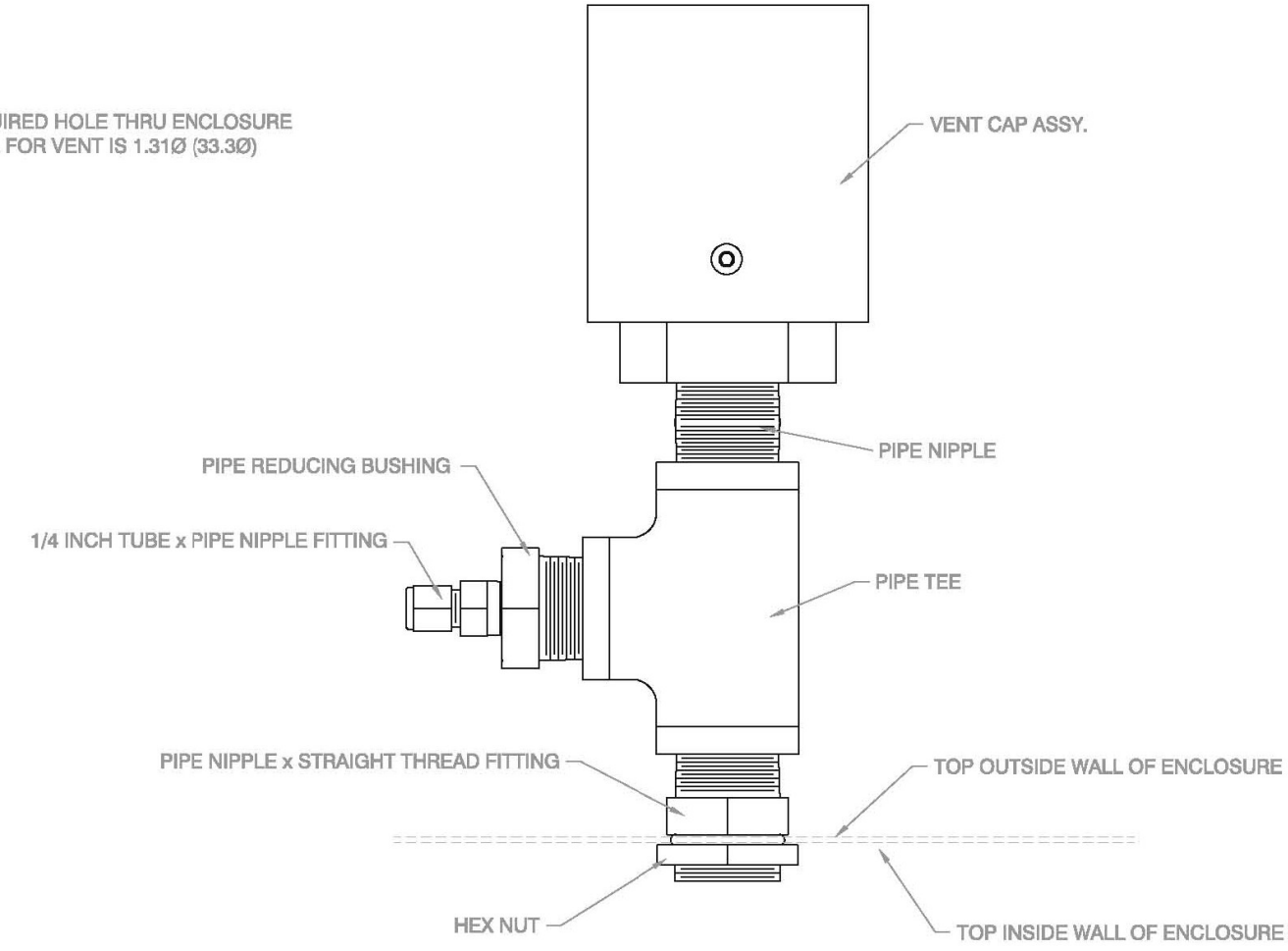

REV #	ECO #	CHANGE(S) DESCRIPTION	DATE	CHANGE BY	APPD BY

The contents of this drawing is the sole property of Purge Solutions. This print and/or its contents shall not be traced or reproduced without prior written permission from Purge Solutions. It shall not be used directly or indirectly in any way detrimental to the interest of Purge Solutions.

DO NOT SCALE DRAWING
UNLESS OTHERWISE SPECIFIED-
Dimensions Are in inches
Dimensions in ( ) Are in mm
Tolerances: .X = ± 0.015
.XX = ± 0.010
.XXX = ± 0.005
Angular = ±0.5°
Break All Sharp Edges
63 Minimum Except As Noted

DRAWN: SLM
DATE: 11/JUL/08
CHECKED: SLM
DATE: 11/JUL/08
APPROVED: SLM
DATE: 11/JUL/08

TITLE: MEDIUM PURGE VENT TOP MOUNT ASSEMBLY
TRYCLOPS X - PURGE CONTROLLERS

PART & DWG #: DO-11113-B
MATERIAL: NOTED
SHEET 1 OF 1
SCALE: N/A
DWG SIZE A
FINISH: N/A

PURGE SOLUTIONS®
WEBSTER, TEXAS, USA
832-368-7166

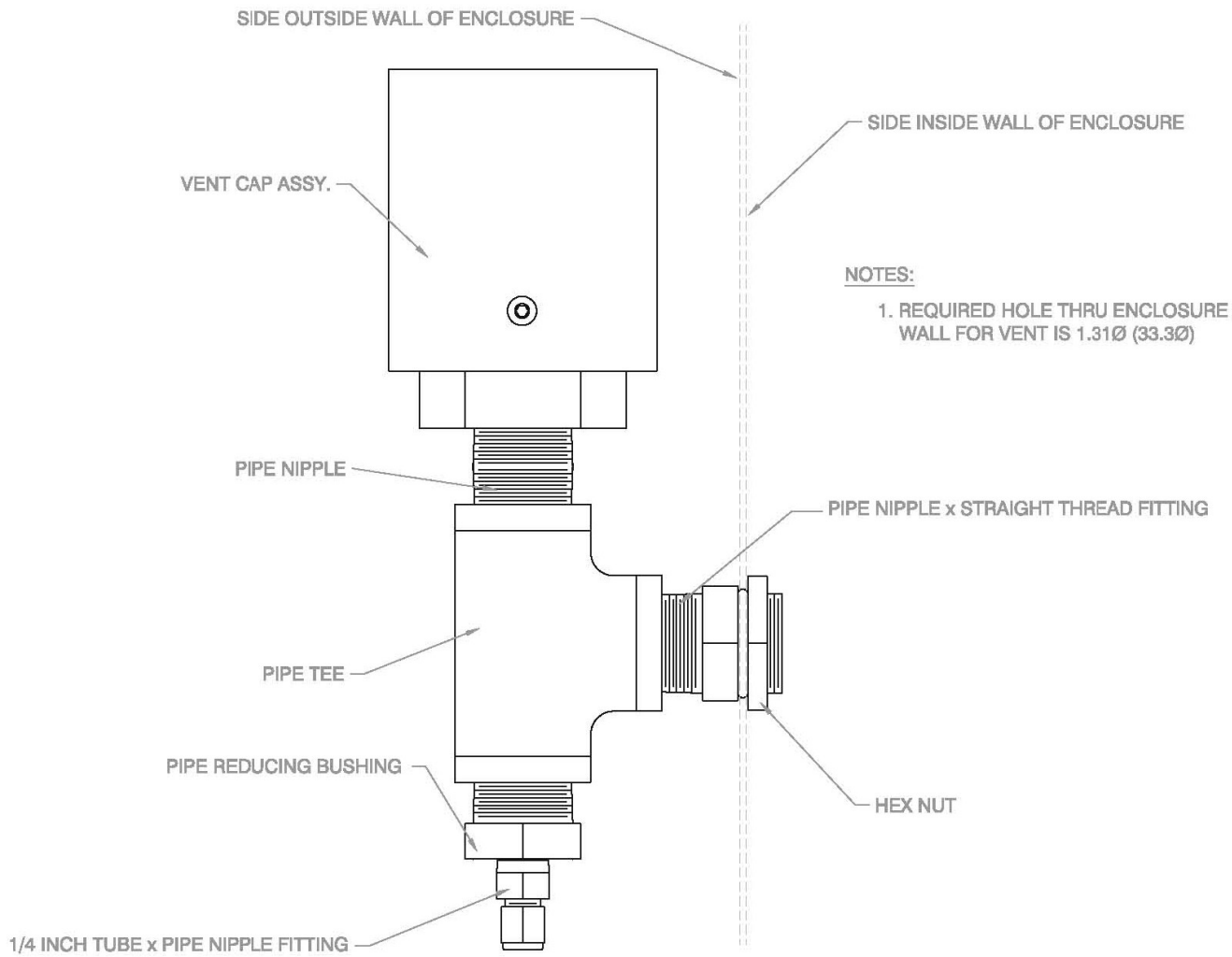

NOTES:

1. REQUIRED HOLE THRU ENCLOSURE WALL FOR VENT IS 1.31Ø (33.3Ø)

REV #	ECO #	CHANGE(S) DESCRIPTION	DATE	CHANGE BY	APPD BY

The contents of this drawing is the sole property of Purge Solutions. This print and/or its contents shall not be traced or reproduced without prior written permission from Purge Solutions. It shall not be used directly or indirectly in any way detrimental to the interest of Purge Solutions.

DO NOT SCALE DRAWING
UNLESS OTHERWISE SPECIFIED-
Dimensions Are in inches
Dimensions in ( ) Are in mm
Tolerances: .X = ± 0.015
.XX = ± 0.010
.XXX = ± 0.005
Angular = ±0.5°
Break All Sharp Edges
63 Minimum Except As Noted

DRAWN: SLM
DATE: 11/JUL/08
CHECKED: SLM
DATE: 11/JUL/08
APPROVED: SLM
DATE: 11/JUL/08

TITLE: MEDIUM PURGE VENT SIDE MOUNT ASSEMBLY ONE
TRYCLOPS X - PURGE CONTROLLERS

PART & DWG #: DO-11114-B
MATERIAL: NOTED
SHEET 1 OF 1
SCALE: N/A
DWG SIZE A
FINISH: N/A

PURGE SOLUTIONS®
WEBSTER, TEXAS, USA
832-368-7166

NOTES:

1. REQUIRED HOLE THRU ENCLOSURE WALL FOR VENT IS 1.31Ø (33.3Ø)

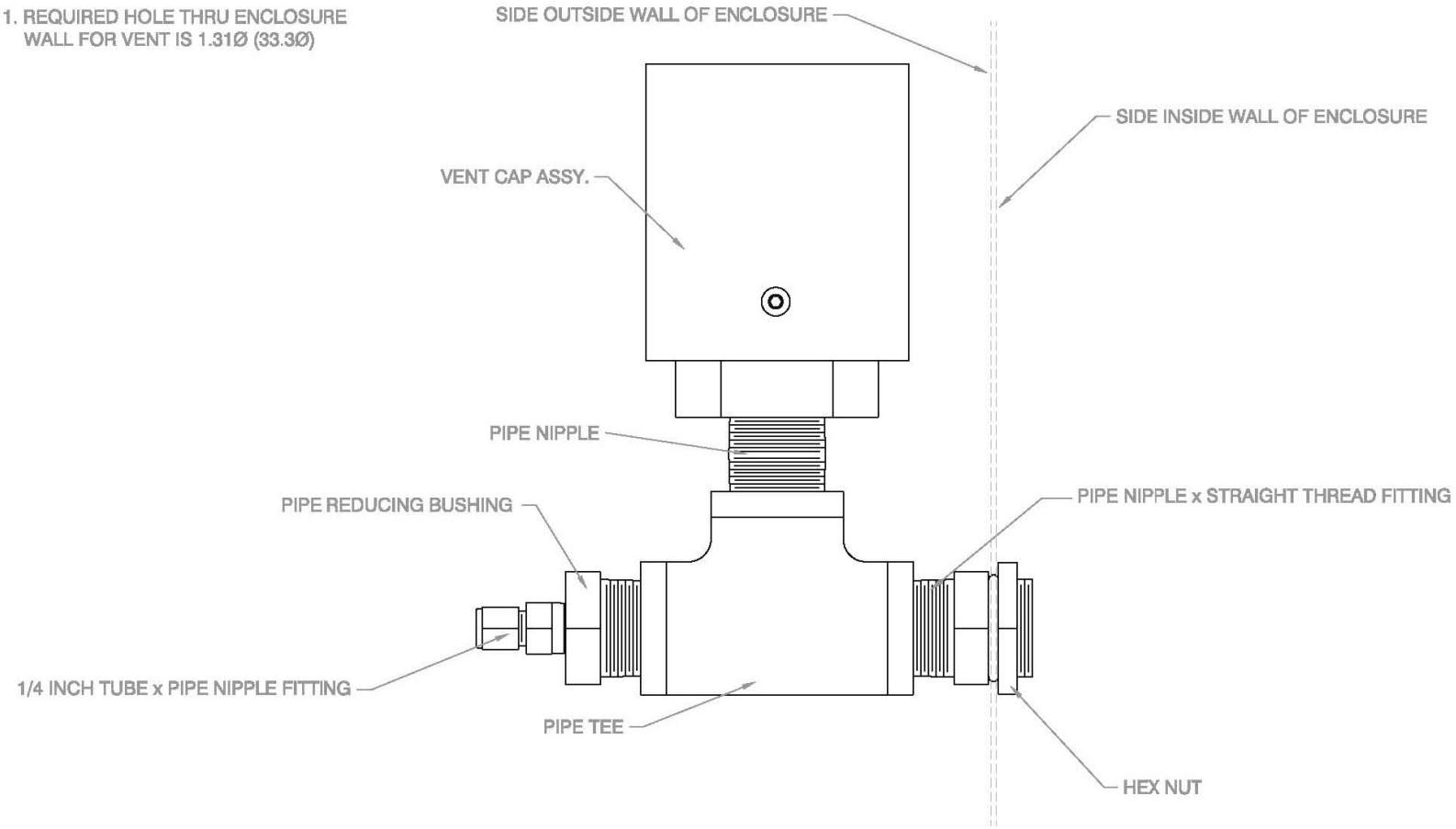

REV #	ECO #	CHANGE(S) DESCRIPTION	DATE	CHANGE BY	APPD BY

The contents of this drawing is the sole property of Purge Solutions. This print and/or its contents shall not be traced or reproduced without prior written permission from Purge Solutions. It shall not be used directly or indirectly in any way detrimental to the interest of Purge Solutions.

DO NOT SCALE DRAWING
UNLESS OTHERWISE SPECIFIED-
Dimensions Are in inches
Dimensions in ( ) Are in mm
Tolerances: .X = ± 0.015
.XX = ± 0.010
.XXX = ± 0.005
Angular = ±0.5°
Break All Sharp Edges
63 Minimum Except As Noted

DRAWN: SLM
DATE: 12/JUL/08
CHECKED: SLM
DATE: 12/JUL/08
APPROVED: SLM
DATE: 12/JUL/08

TITLE: MEDIUM PURGE VENT SIDE MOUNT ASSEMBLY TWO TRYCLOPS X - PURGE CONTROLLERS

PART & DWG #: DO-11115-B
MATERIAL: NOTED
SHEET 1 OF 1
SCALE: N/A
DWG SIZE A
FINISH: N/A

PURGE SOLUTIONS®
WEBSTER, TEXAS, USA
832-368-7166

NOTES:

1. REQUIRED HOLE THRU ENCLOSURE WALL FOR VENT IS 2.38Ø (60.5Ø)

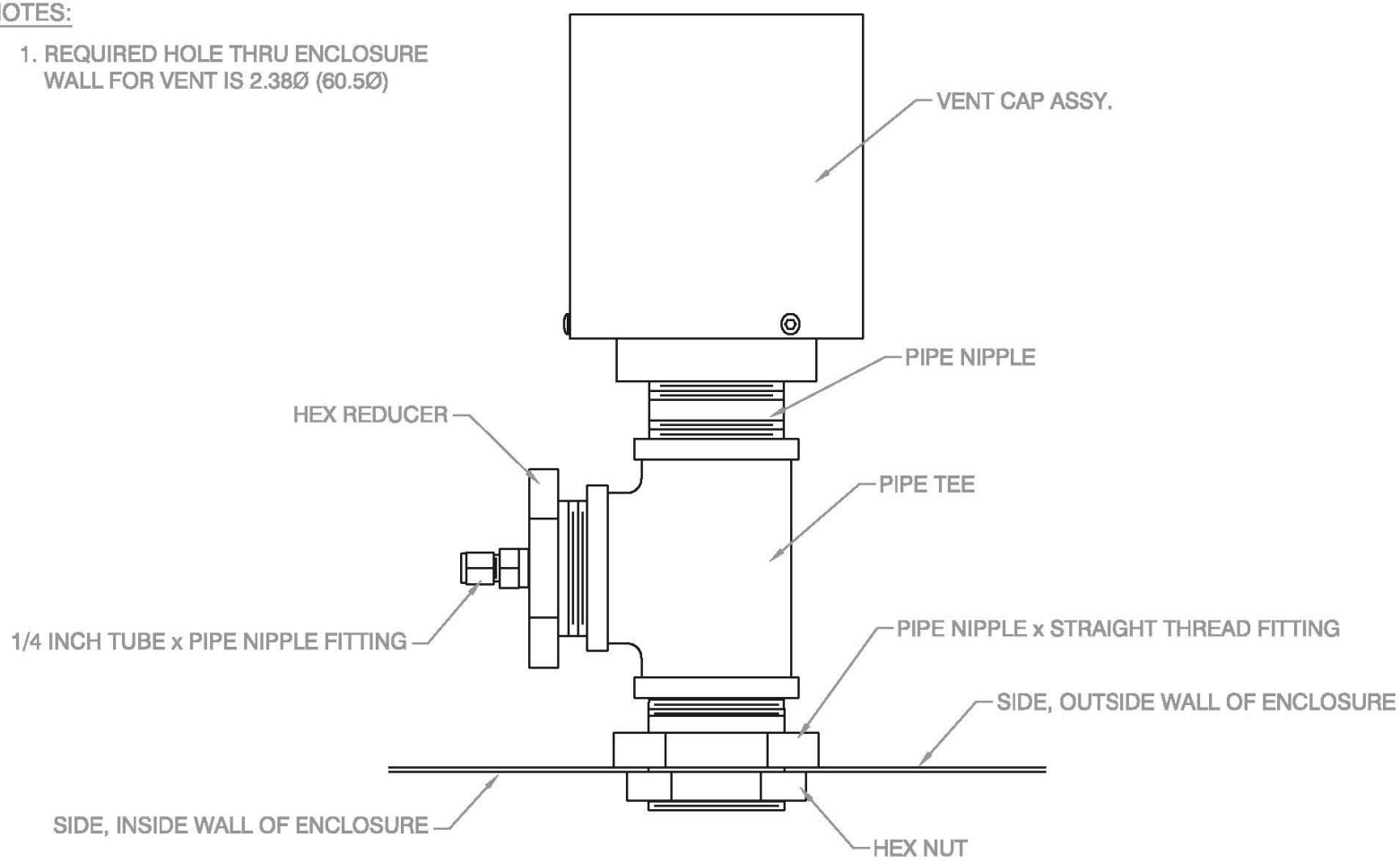

REV #	ECO #	CHANGE(S) DESCRIPTION	DATE	CHANGE BY	APPD BY

The contents of this drawing is the sole property of Purge Solutions. This print and/or its contents shall not be traced or reproduced without prior written permission from Purge Solutions. It shall not be used directly or indirectly in any way detrimental to the interest of Purge Solutions.

DO NOT SCALE DRAWING
UNLESS OTHERWISE SPECIFIED-
Dimensions Are in Inches
Dimensions in ( ) Are in mm
Tolerances: .X = ± 0.015
.XX = ± 0.010
.XXX = ± 0.005
Angular = ±0.5°
Break All Sharp Edges
63 Minimum Except As Noted

DRAWN: WJT
DATE: 15/OCT/09
CHECKED: WJT
DATE: 15/OCT/09
APPROVED: WJT
DATE: 15/OCT/09

TITLE: LARGE PURGE VENT TOP MOUNT ASSY.
TRYCLOPS X - PURGE CONTROLLER, XP & SM VERSIONS

PART & DWG #: MM-11128-A
MATERIAL: 316 STAINLESS STEEL
SHEET 1 OF 1
SCALE: N/A
DWG SIZE A
FINISH: N/A

PURGE SOLUTIONS®
WEBSTER, TEXAS, USA
832-368-7166

NOTES:

1. REQUIRED HOLE THRU ENCLOSURE WALL FOR VENT IS 2.38Ø (60.5Ø)

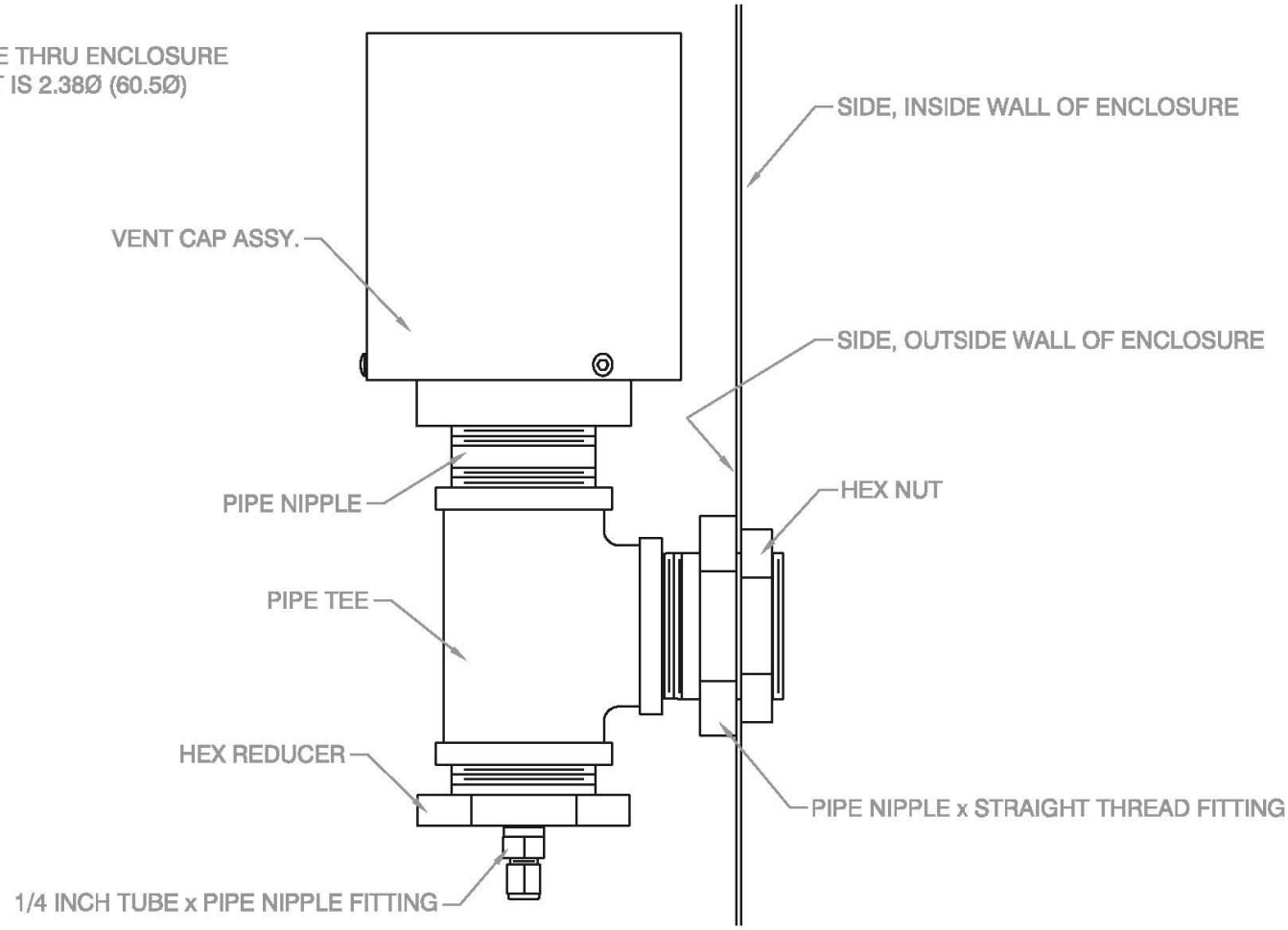

REV #	ECO #	CHANGE(S) DESCRIPTION	DATE	CHANGE BY	APPD BY

The contents of this drawing is the sole property of Purge Solutions. This print and/or its contents shall not be traced or reproduced without prior written permission from Purge Solutions. It shall not be used directly or indirectly in any way detrimental to the interest of Purge Solutions.

DO NOT SCALE DRAWING
UNLESS OTHERWISE SPECIFIED-
Dimensions Are In Inches
Dimensions In () Are In mm
Tolerances: .X = ± 0.015
.XX = ± 0.010
.XXX = ± 0.005
Angular = ±0.5°
Break All Sharp Edges
63 Minimum Except As Noted

DRAWN: WJT
DATE: 15/OCT/09
CHECKED: WJT
DATE: 15/OCT/09
APPROVED: WJT
DATE: 15/OCT/09

TITLE: LARGE PURGE VENT SIDE MOUNT ASSY ONE
TRYCLOPS X - PURGE CONTROLLER, XP & SM VERSIONS

PART & DWG #: MM-11129-A
SHEET 1 OF 1
SCALE: N/A
DWG SIZE A
MATERIAL: 316 STAINLESS STEEL
FINISH: N/A

PURGE SOLUTIONS®
WEBSTER, TEXAS, USA
832-368-7166

NOTES:

1. REQUIRED HOLE THRU ENCLOSURE WALL FOR VENT IS 2.38Ø (60.5Ø)

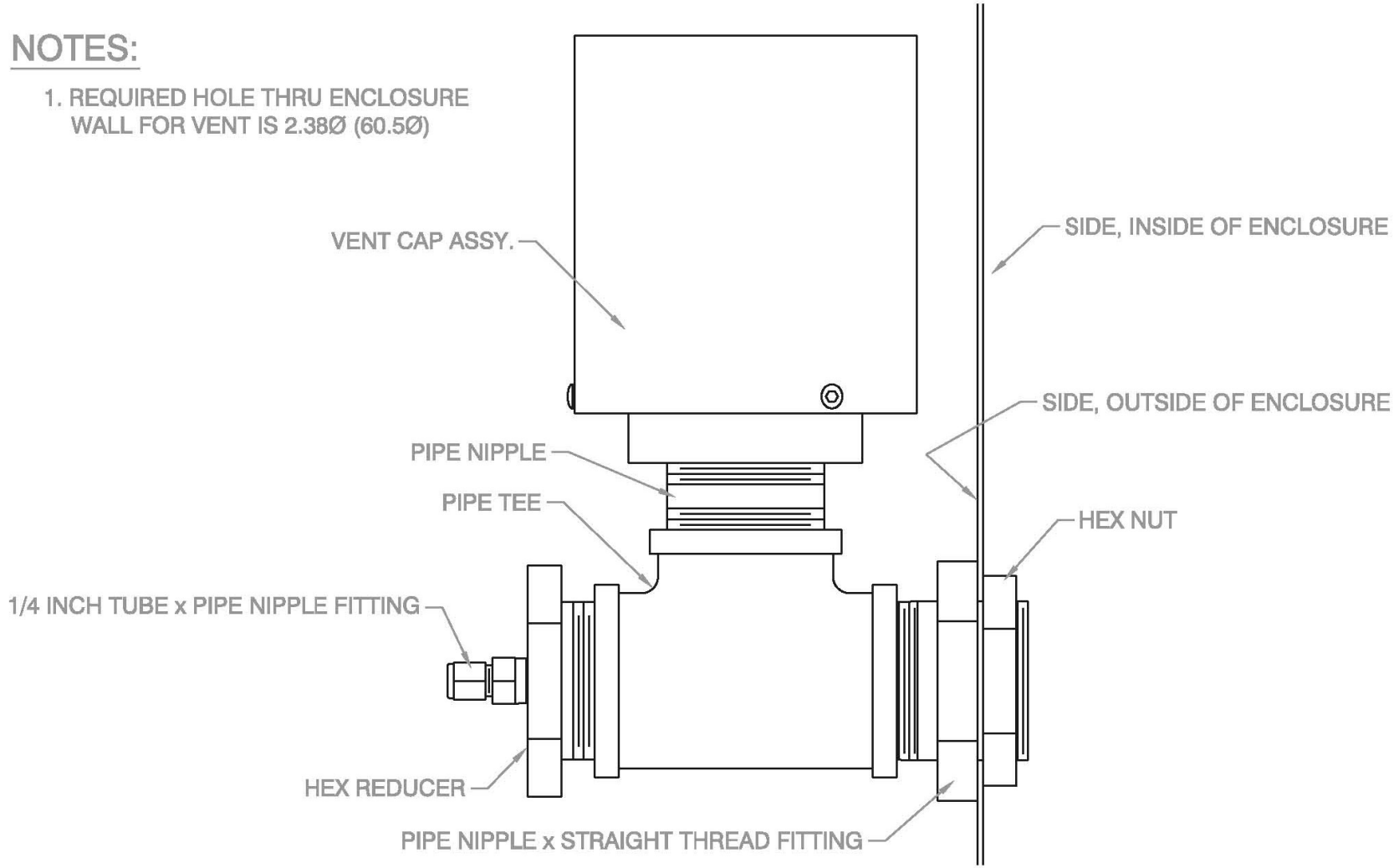

REV #	ECO #	CHANGE(S) DESCRIPTION	DATE	CHANGE BY	APPD BY

The contents of this drawing is the sole property of Purge Solutions. This print and/or its contents shall not be traced or reproduced without prior written permission from Purge Solutions. It shall not be used directly or indirectly in any way detrimental to the interest of Purge Solutions.

DO NOT SCALE DRAWING
UNLESS OTHERWISE SPECIFIED-
Dimensions Are in Inches
Dimensions in ( ) Are in mm
Tolerances: .X = ± 0.015
.XX = ± 0.010
.XXX = ± 0.005
Angular = ±0.5°
Break All Sharp Edges
63 Minimum Except As Noted

DRAWN: WJT
DATE: 15/OCT/09
CHECKED: WJT
DATE: 15/OCT/09
APPROVED: WJT
DATE: 15/OCT/09

TITLE: LARGE PURGE VENT SIDE MOUNT TWO TRYCLOPS X - PURGE CONTROLLER, XP & SM VERSION

PART & DWG #: MM-11130-A
MATERIAL: 316 STAINLESS STEEL
SHEET 1 OF 1
SCALE: N/A
DWG SIZE A
FINISH: N/A

PURGE SOLUTIONS®
WEBSTER, TEXAS, USA
832-368-7166

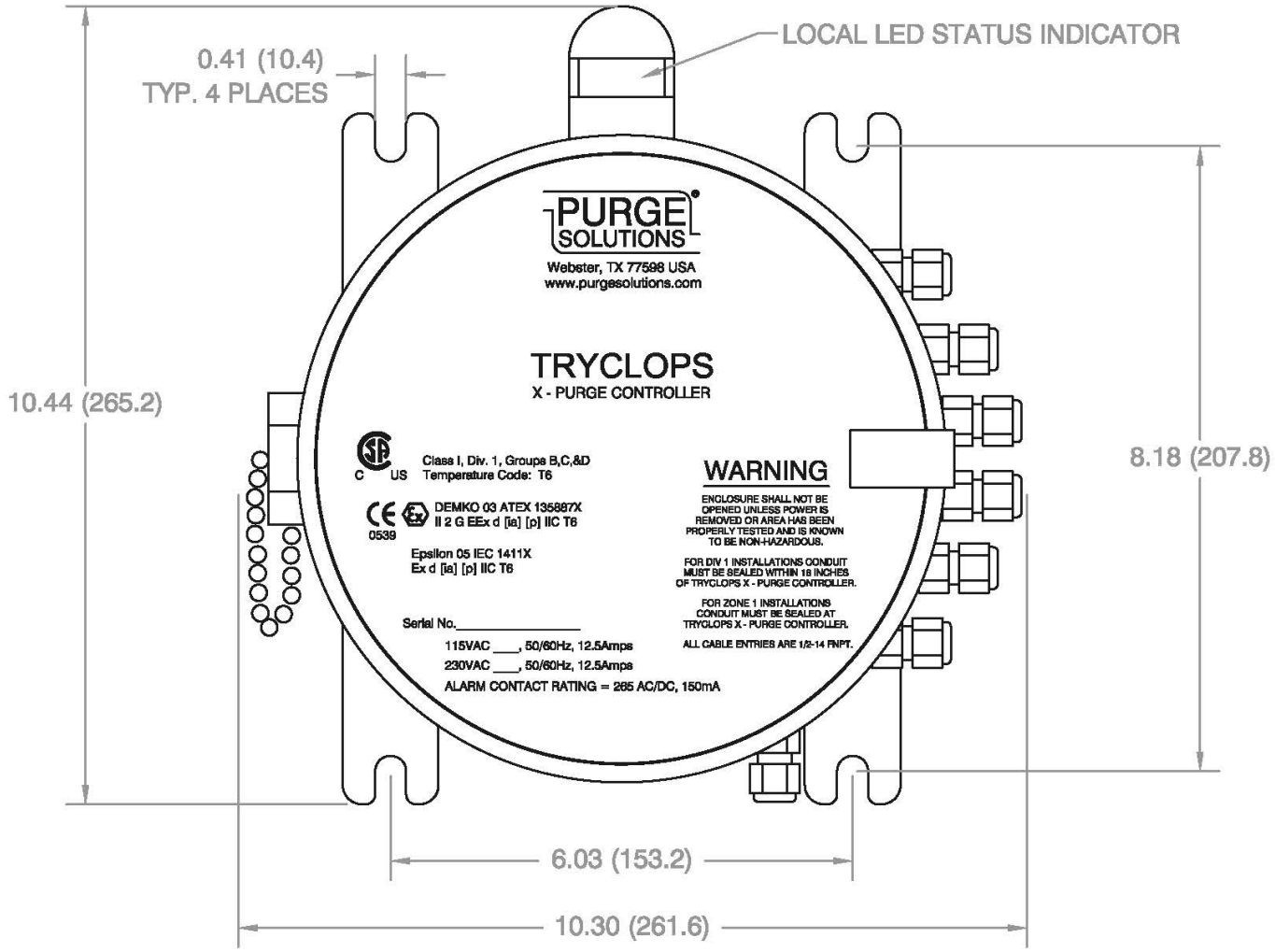

REV #	ECO #	CHANGE(S) DESCRIPTION	DATE	CHANGE BY	APPD BY

The contents of this drawing is the sole property of Purge Solutions. This print and/or its contents shall not be traced or reproduced without prior written permission from Purge Solutions. It shall not be used directly or indirectly in any way detrimental to the interest of Purge Solutions.

DO NOT SCALE DRAWING
UNLESS OTHERWISE SPECIFIED-
Dimensions Are in Inches
Dimensions in ( ) Are in mm
Tolerances: .X = ± 0.015
.XX = ± 0.010
.XXX = ± 0.005
Angular = ±0.5°
Break All Sharp Edges
63 Minimum Except As Noted

DRAWN: WJT
DATE: 15/NOV/03
CHECKED: WJT
DATE: 15/NOV/03
APPROVED: WJT
DATE: 15/NOV/03

TITLE: DIMENSIONAL INSTALLATION FRONT VIEW
TRYCLOPS X - PURGE CONTROLLER

PART & DWG #: DO-30030-E-1
MATERIAL: N/A
SHEET 1 OF 3
SCALE: N/A
DWG SIZE A
FINISH: N/A

PURGE SOLUTIONS
WEBSTER, TEXAS, USA
832-368-7166

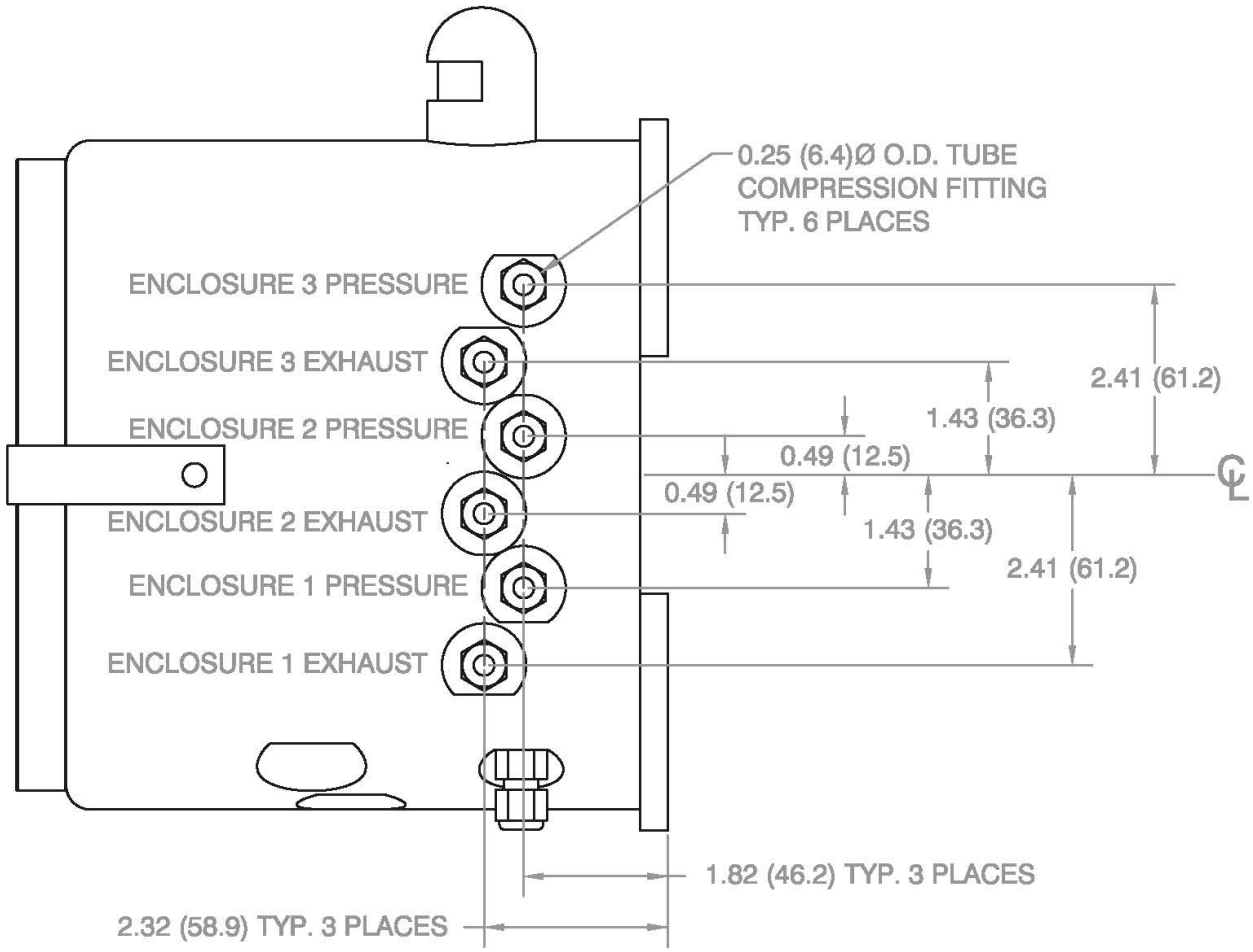

REV #	ECO #	CHANGE(S) DESCRIPTION	DATE	CHANGE BY	APPD BY

The contents of this drawing is the sole property of Purge Solutions. This print and/or its contents shall not be traced or reproduced without prior written permission from Purge Solutions. It shall not be used directly or indirectly in any way detrimental to the interest of Purge Solutions.

DO NOT SCALE DRAWING
UNLESS OTHERWISE SPECIFIED-
Dimensions Are In Inches
Dimensions In ( ) Are In mm
Tolerances: .X = ± 0.015
.XX = ± 0.010
.XXX = ± 0.005
Angular = ±0.5°
Break All Sharp Edges
63 Minimum Except As Noted

DRAWN: WJT
DATE: 15/NOV/03
CHECKED: WJT
DATE: 15/NOV/03
APPROVED: WJT
DATE: 15/NOV/03

TITLE: DIMENSIONAL INSTALLATION SIDE VIEW
TRYCLOPS X - PURGE CONTROLLER

PART & DWG #: DO-30030-E-2
SHEET 2 OF 3
SCALE: N/A
DWG SIZE A
MATERIAL: N/A
FINISH: N/A

PURGE SOLUTIONS®
WEBSTER, TEXAS, USA
832-368-7166

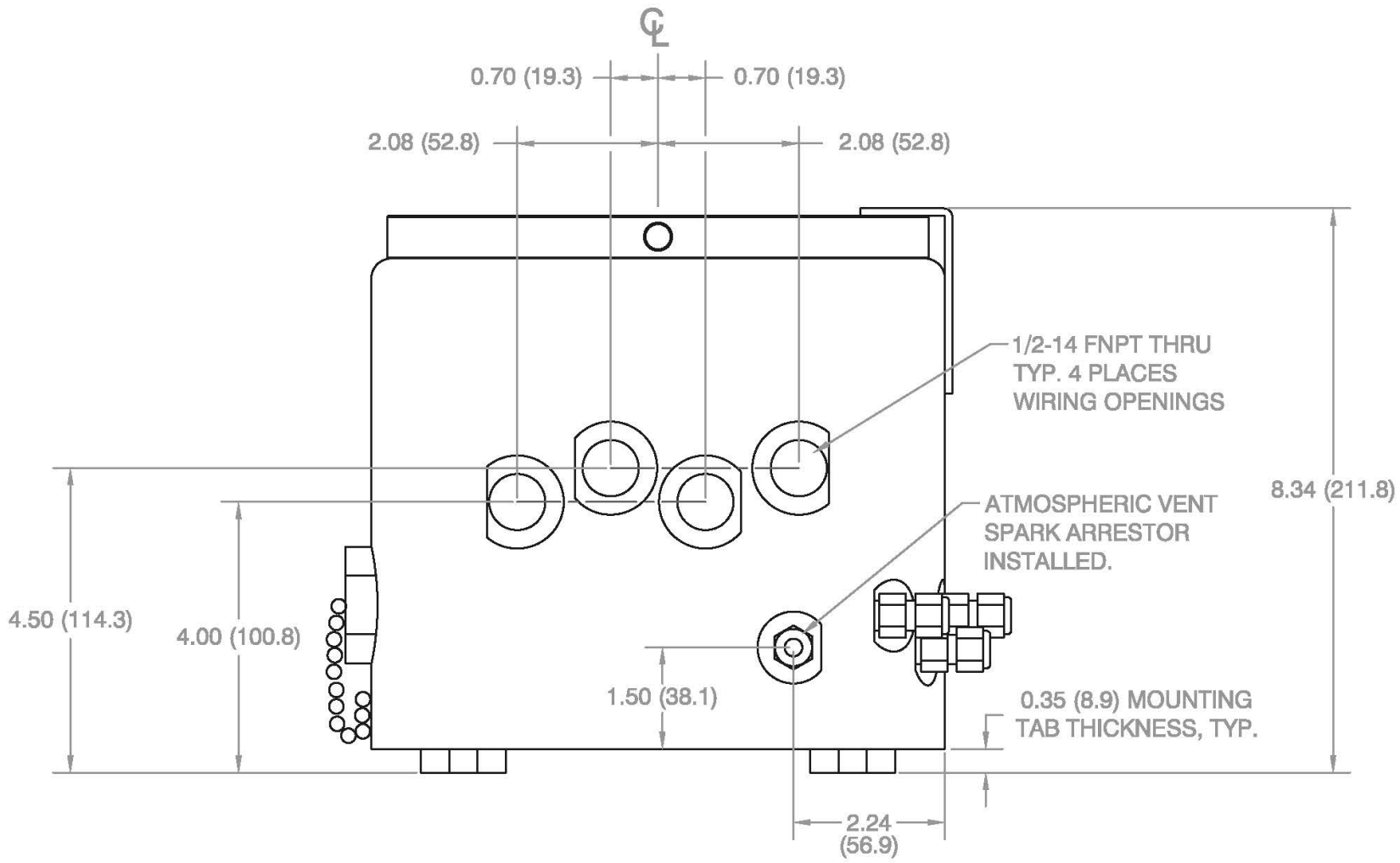

REV #	ECO #	CHANGE(S) DESCRIPTION	DATE	CHANGE BY	APPD BY

The contents of this drawing is the sole property of Purge Solutions. This print and/or its contents shall not be traced or reproduced without prior written permission from Purge Solutions. It shall not be used directly or indirectly in any way detrimental to the interest of Purge Solutions.

DO NOT SCALE DRAWING
UNLESS OTHERWISE SPECIFIED-

Dimensions Are In Inches
Dimensions In ( ) Are In mm

Tolerances: .X = ± 0.015
.XX = ± 0.010
.XXX = ± 0.005
Angular = ±0.5°

Break All Sharp Edges
63 Minimum Except As Noted

DRAWN: WJT
DATE: 15/NOV/03

CHECKED: WJT
DATE: 15/NOV/03

APPROVED: WJT
DATE: 15/NOV/03

TITLE: DIMENSIONAL INSTALLATION BOTTOM VIEW
TRYCLOPS X - PURGE CONTROLLER

PART & DWG #: DO-30030-E-3

MATERIAL: N/A

SHEET 3 OF 3

SCALE: N/A

DWG SIZE A

FINISH: N/A

PURGE SOLUTIONS®

WEBSTER, TEXAS, USA
832-368-7166

TERMINAL BLOCK - J1	
POWER CONNECTION TO PURGE CONTROLLER	
A	POSITION - 1, LINE OR HOT
B	POSITION - 2, NEUTRAL
C	POSITION - 3, GROUND

TERMINAL BLOCK - J1	
POWER CONNECTION FROM PURGE CONTROLLER TO ELECTRICAL EQUIPMENT	
D	POSITION - 4, LINE OR HOT
E	POSITION - 5, NEUTRAL
F	POSITION - 3, GROUND

TERMINAL BLOCK - J1	
POWER CONNECTION FROM PURGE CONTROLLER TO AUTOMATIC LEAKAGE COMPENSATION AIR INLET KIT SOLENOID VALVE	
G	POSITION - 7, LINE OR HOT
H	POSITION - 8, NEUTRAL
J	POSITION - 9, GROUND

POWER CONTACT RATING
115 VAC, 47 - 63Hz
25 Amp MAX CURRENT

ALARM CONTACT RATING
265 VAC, 47 - 63Hz
150mA MAX CURRENT

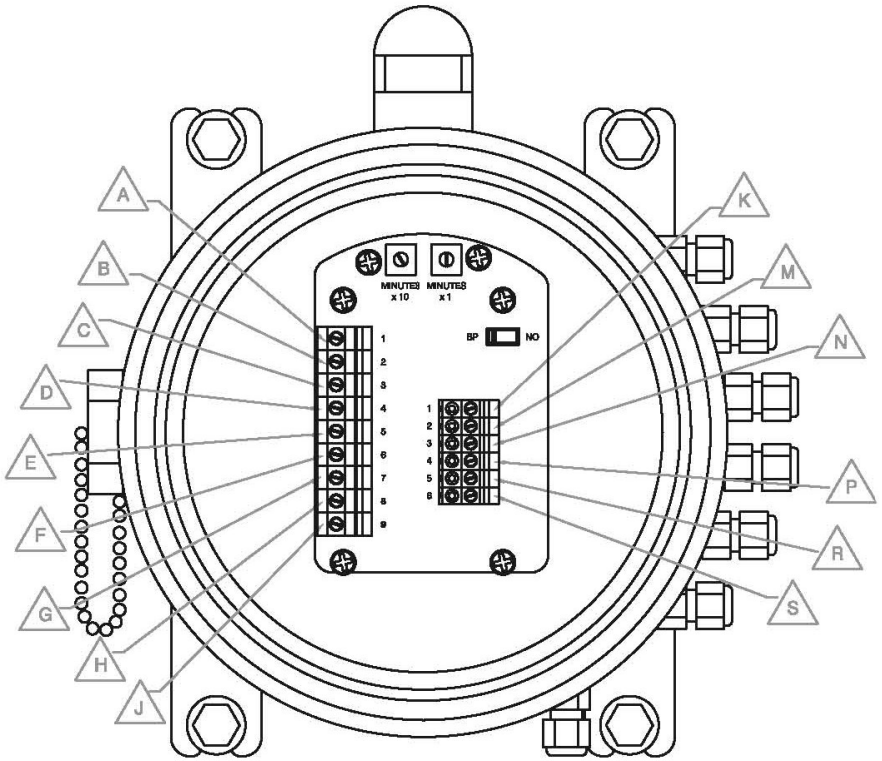

TERMINAL BLOCK - J2	
ALARM TERMINALS	
LOSS OF PURGE PRESSURE	
K	POSITION - 1 (STANDARD) OPEN ON ALARM (OPTIONAL) CLOSED ON ALARM
M	POSITION - 2, RETURN
LOSS OF EXHAUST FLOW	
N	POSITION - 3 (STANDARD) OPEN ON ALARM (OPTIONAL) CLOSED ON ALARM
P	POSITION - 4, RETURN
MAINTENENCE ALARM	
R	POSITION - 5 (STANDARD) OPEN ON ALARM (OPTIONAL) CLOSED ON ALARM
S	POSITION - 6, RETURN

NOTES:

1. ALL MAINS AND OUTPUT WIRING INSULATION MUST BE A MINIMUM OF 0.04 INCH (1.0 MM) THICK.

CERTIFICATION CONTROL DRAWING

REV #	ECO #	CHANGE(S) DESCRIPTION	DATE	CHANGE BY	APPD BY

The contents of this drawing is the sole property of Purge Solutions. This print and/or its contents shall not be traced or reproduced without prior written permission from Purge Solutions. It shall not be used directly or indirectly in any way detrimental to the interest of Purge Solutions.

DO NOT SCALE DRAWING
UNLESS OTHERWISE SPECIFIED-
Dimensions Are in Inches
Dimensions In () Are in mm
Tolerances: .X = ± 0.015
.XX = ± 0.010
.XXX = ± 0.005
Angular = ±0.5°
Break All Sharp Edges
63 Minimum Except As Noted

DRAWN: WJT
DATE: 14/NOV/03
CHECKED: WJT
DATE: 14/NOV/03
APPROVED: WJT
DATE: 14/NOV/03

TITLE: 115VAC CUSTOMER WIRING DIAGRAM
TRYCLOPS X - PURGE CONTROLLER

PART & DWG #: DO-30038-G
MATERIAL: N/A
SHEET 1 OF 1
SCALE: N/A
DWG SIZE A
FINISH: N/A

PURGE SOLUTIONS®
WEBSTER, TEXAS, USA
832-368-7166

TERMINAL BLOCK - J1	
POWER CONNECTION TO PURGE CONTROLLER	
A	POSITION - 1, LINE OR HOT
B	POSITION - 2, NEUTRAL
C	POSITION - 3, GROUND

TERMINAL BLOCK - J1	
POWER CONNECTION FROM PURGE CONTROLLER TO ELECTRICAL EQUIPMENT	
D	POSITION - 4, LINE OR HOT
E	POSITION - 5, NEUTRAL
F	POSITION - 3, GROUND

TERMINAL BLOCK - J1	
POWER CONNECTION FROM PURGE CONTROLLER TO AUTOMATIC LEAKAGE COMPENSATION AIR INLET KIT SOLENOID VALVE	
G	POSITION - 7, LINE OR HOT
H	POSITION - 8, NEUTRAL
J	POSITION - 9, GROUND

POWER CONTACT RATING
230 VAC, 47 - 63Hz
12.5 Amp MAX CURRENT

ALARM CONTACT RATING
265 VAC, 47 - 63Hz
150mA MAX CURRENT

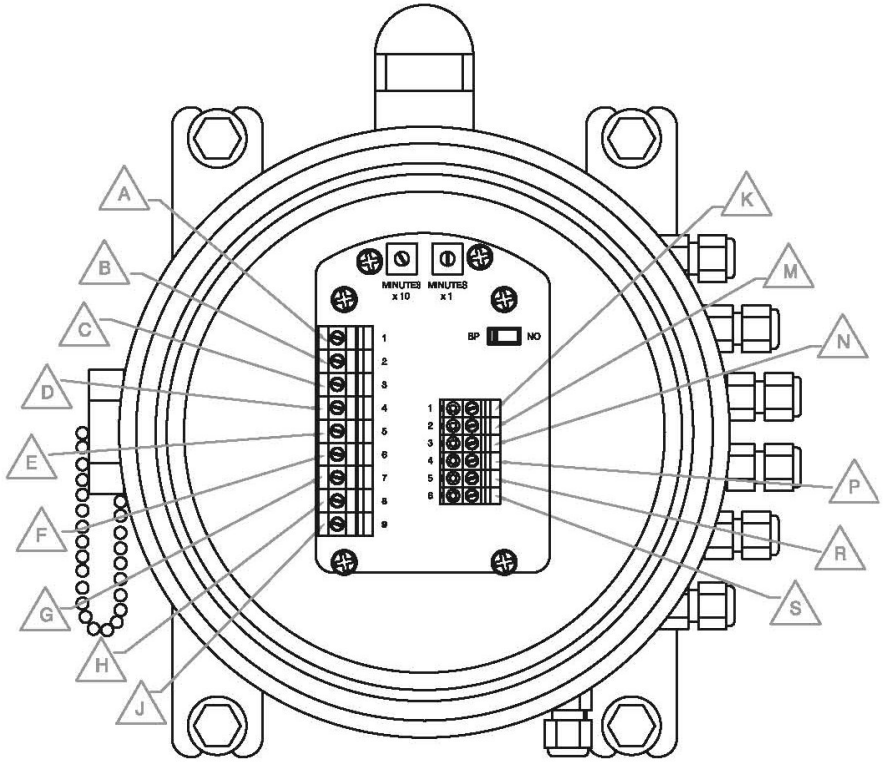

TERMINAL BLOCK - J2	
ALARM TERMINALS	
LOSS OF PURGE PRESSURE	
K	POSITION - 1 (STANDARD) OPEN ON ALARM (OPTIONAL) CLOSED ON ALARM
M	POSITION - 2, RETURN
LOSS OF EXHAUST FLOW	
N	POSITION - 3 (STANDARD) OPEN ON ALARM (OPTIONAL) CLOSED ON ALARM
P	POSITION - 4, RETURN
MAINTENENCE ALARM	
R	POSITION - 5 (STANDARD) OPEN ON ALARM (OPTIONAL) CLOSED ON ALARM
S	POSITION - 6, RETURN

NOTES:

1. ALL MAINS AND OUTPUT WIRING INSULATION MUST BE A MINIMUM OF 0.04 INCH (1.0 MM) THICK.

CERTIFICATION CONTROL DRAWING

REV #	ECO #	CHANGE(S) DESCRIPTION	DATE	CHANGE BY	APPD BY

The contents of this drawing is the sole property of Purge Solutions. This print and/or its contents shall not be traced or reproduced without prior written permission from Purge Solutions. It shall not be used directly or indirectly in any way detrimental to the interest of Purge Solutions.

DO NOT SCALE DRAWING
UNLESS OTHERWISE SPECIFIED-
Dimensions Are In Inches
Dimensions In ( ) Are In mm
Tolerances: .X = ± 0.015
.XX = ± 0.010
.XXX = ± 0.005
Angular = ±0.5°
Break All Sharp Edges
63 Minimum Except As Noted

DRAWN: WJT
DATE: 14/NOV/03
CHECKED: WJT
DATE: 14/NOV/03
APPROVED: WJT
DATE: 14/NOV/03

TITLE: 230VAC CUSTOMER WIRING DIAGRAM
TRYCLOPS X - PURGE CONTROLLER

PART & DWG #: DO-30039-G
MATERIAL: N/A
SHEET 1 OF 1
SCALE: N/A
DWG SIZE A
FINISH: N/A

PURGE SOLUTIONS®
WEBSTER, TEXAS, USA
832-368-7166

Section 7

Options

Continuous Dilution Purge Gas Inlet Kits:

Continuous dilution is a method of maintaining pressure in an enclosure in which after the enclosure has been pre-purged the protective gas is passed continuously through the enclosure at a pressure above that of the specified minimum and discharged to the outside atmosphere through an exhaust vent. The same volume of purge gas is maintained during and after the dilution cycle.

Purge Solutions, Inc. offers three sizes of continuous dilution models, the first size is our Small Continuous Dilution Purge Gas Inlet Kit for enclosures with a volume up to 15 cubic feet (425 liters). Model number PSO-SCD-A is our small aluminum version and model number PSO-SCD-S is our small stainless steel version. Purge gas supply inlet to Small Continuous Dilution Purge Gas Inlet Kit regulator is 1/4-18 FNPT.

The second size we offer is our Medium Continuous Dilution Purge Gas Inlet Kit for enclosures with volumes up to 75 cubic feet (2,125 liters). Model number PSO-MCD-A is our medium aluminum version and model number PSO-MCD-S is our medium stainless steel version. Purge gas supply inlet to Medium Continuous Dilution Purge Gas Inlet Kit regulator is 1/2-14 FNPT.

The third size we offer is our Large Continuous Dilution Purge Gas Inlet Kit for enclosures with volumes up to 200 cubic feet (5,663 liters). Model number PSO-LCD-A is our large aluminum version and model number PSO-LCD-S is our large stainless steel version. Purge gas supply inlet to Large Continuous Dilution Purge Gas Inlet Kit regulator is 1/2-14 FNPT. All Continuous Dilution Purge Gas Inlet Kits include input fittings, regulator, gauge, bracket and mounting hardware.

Automatic Leakage Compensation Purge Gas Inlet Kits:

Automatic leakage compensation allows a higher volume of protective gas supply to be automatically selected by the TRYCLOPS X – Purge Controller, XP Version to speed up dilution of potentially flammable materials to an acceptable level, permitting a more-rapid application of initial power, or restoration of power to protected electrical equipment, after service. When the dilution cycle has elapsed, the large volume of purge gas can be automatically turned off by the CYCLOPS X – Purge Controller, XP Version. A volume of purge gas larger than the leak rate of the enclosure will be introduced into the now protected enclosure to maintain at least 0.50 inches H2O (1.25 mbar).

Automatic Leakage Compensation Purge Gas Inlet Kits (Continued):

Purge Solutions, Inc. offers three sizes of leakage compensation models, the first size is our Small Automatic Leakage Compensation Purge Gas Inlet Kits are for enclosures with a volume up to 15 cubic feet (425 liters). Model number PSO-SALC-D1A is our small, Division, 115VAC, aluminum version, model number PSO-SALC-D2A is our small, Division, 230VAC, aluminum version, model number PSO-SALC-D1S is our small, Division, 115VAC, stainless steel version and model number PSO-SALC-D2S is our small, Division, 230VAC, stainless steel version. Model number PSO-SALC-Z1A is our small, Zone, 115VAC, aluminum version, model number PSO-SALC-Z2A is our small, Zone, 230VAC, aluminum version, model number PSO-SALC-Z1S is our small, Zone, 115VAC, stainless steel version and model number PSO-SALC-Z2S is our small, Zone, 230VAC, stainless steel version. Small Automatic Leakage Compensation Purge Gas Inlet Kit supply gas inlet to regulator is 1/4-18 FNPT.

The second size we offer is our Medium Automatic Leakage Compensation Purge Gas Inlet Kits are for enclosures with a volume up to 75 cubic feet (2.125 liters). Model number PSO-MALC-D1A is our medium, Division, 115VAC, aluminum version, model number PSO-MALC-D2A is our medium, Division, 230VAC, aluminum version, model number PSO-MALC-D1S is our medium, Division, 115VAC, stainless steel version and model number PSO-MALC-D2S is our medium, Division, 230VAC, stainless steel version. Model number PSO-MALC-Z1A is our medium, Zone, 115VAC, aluminum version, model number PSO-MALC-Z2A is our medium, Zone, 230VAC, aluminum version, model number PSO-MALC-Z1S is our medium, Zone, 115VAC, stainless steel version and model number PSO-MALC-Z2S is our medium, Zone, 230VAC, stainless steel version. Purge gas supply inlet to Medium Automatic Leakage Compensation Purge Gas Inlet Kit regulator is 3/8-18 FNPT.

The third size we offer is our Large Automatic Leakage Compensation Purge Gas Inlet Kit for enclosures with volumes up to 200 cubic feet (5,663 liters). Model number PSO-LALC-D1A is our large, Division, 115VAC, aluminum version, model number PSO-LALC-D2A is our large, Division, 230VAC, aluminum version, model number PSO-LALC-D1S is our large, Division, 115VAC, stainless steel version and model number PSO-LALC-D2S is our large, Division, 230VAC, stainless steel version. Model number PSO-LALC-Z1A is our large, Zone, 115VAC, aluminum version, model number PSO-LALC-Z2A is our large, Zone, 230VAC, aluminum version, model number PSO-LALC-Z1S is our large, Zone, 115VAC, stainless steel version and model number PSO-LALC-Z2S is our large, Zone, 230VAC, stainless steel version. Purge gas supply inlet to Large Automatic Leakage Compensation Purge Gas Inlet Kit regulator is 1/2-14 FNPT. All Automatic Leakage Compensation Purge Gas Inlet Kits include input solenoid valve, fittings, regulator, gauge and manifold block.

Back-Up Vents:

To protect the enclosure from over pressure; Purge Solutions, Inc. offers three sizes of back-up vents. The first size is our Small Back–Up Vent for enclosures with a volume up to 15 cubic feet (425 liters). Model number PSO-SBUV-S is our small side mount version and model number PSO-SBUV-T is our small top mount version.

The second size we offer is our Large Back-Up Vent for enclosures with volumes up to 75 cubic feet (2,125 liters). Model number PSO-MBUV-S is our medium side mount version and model number PSO-MBUV-T is our medium top mount version.

The third size we offer is our Large Back-Up Vent for enclosures with volumes up to 200 cubic feet (5,663 liters). Model number PSO-LBUV-S is our large side mount version and model number PSO-LBUV-T is our large top mount version. All Back-Up Vents have a cracking pressure between 0.8 to 1.0 Inch H2O (2.0 to 2.5 mbar), are constructed of 316 stainless steel and come with all mounting hardware.

Vortex Cabinet Cooler Systems:

For applications where thermal management of electrical cabinets and control panels are required; Purge Solutions, Inc. offers Vortex Cabinet Cooler Systems, which provide cooling capacities for your application and maintain a NEMA 4 or 4X (IP66) rating for installation and use in hazardous area. Contact your local Purge Solutions, Inc. representative or the factory for sizing of system and installation information.

♪ ***NOTE: There are special modifications and sizing requirements to be made before a Vortex Cabinet Cooler is able to be installed and used in a hazardous area.***

Back-Up Purge Gas Kit:

In the event the initial protective purge gas supply is lost, this kit insures that a back up source of protective purge gas is automatically applied to the protected enclosure. Purge Solutions, Inc. model number PSO-BUPG-K has inlets and outlet which are 3/8 – 18 FNPT.

♪ ***NOTE: The Back-Up Purge Gas Kit requires a minimum air supply pressure of 80 psig (5.5 bar) to function properly.***

Protective Gas Loss Indicator Kit:

An explosion-proof differential pressure switch may be installed to provide an alarm contact output signal to indicate the loss of primary purge gas supply. While a second can be installed to provide loss of back-up purge gas. Model number is PSO-PGLI-K.

Differential Pressure Gauge Kits:

Purge Solutions, Inc. also offers an all stainless steel Differential Pressure Gauge Kit, which can be mounted on the side, top or bottom of an enclosure. Model number PSO-DPG-L is our left side mount version, model number PSO-DPG-R is our right side mount version, model number PSO-DPG-T is our top mount version and model number PSO-DPG-B is our bottom mount version.

Increased Safety Window Kits:

Purge Solutions, Inc. also offers 5 different sizes of Increased Safety Window Kits with each size available in anodized aluminum or 316 stainless steel bezel material, which can be mounted on the side, top or bottom of an enclosure. Model number PSO-1/32DINW-A is our 1/32 Din size with anodized aluminum bezel, model number PSO-1/32DINW-S is our 1/32 Din size with 316 stainless steel bezel. Model number PSO-1/16DINW-A is our 1/16 Din size with anodized aluminum bezel, model number PSO-1/16DINW-S is our 1/16 Din size with 316 stainless steel bezel. Model number PSO-1/8DINW-A is our 1/8 Din size with anodized aluminum bezel, model number PSO-1/8DINW-S is our 1/8 Din size with 316 stainless steel bezel. Model number PSO-1/4DINW-A is our 1/4 Din size with anodized aluminum bezel, model number PSO-1/4DINW-S is our 1/4 Din size with 316 stainless steel bezel. Model number PSO-XLW-A is our X-Large size with anodized aluminum bezel, model number PSO-XLW-S is our X-Large size with 316 stainless steel bezel.

Increased Safety Enclosures:

Purge Solutions, Inc. also offers Increased Safety Enclosures that are available in powder coated carbon steel, 304 or 316 stainless steel in over 60 standard sizes or we can build a custom enclosure to your specifications. All have an IP66 / NEMA 4 ingress protection rating and an ambient temperature rating of - 40°F to 176°F (- 40°C to 80°C).

Section 8

Getting Help

Getting Help:

Answers to many questions concerning the TRYCLOPS X – Purge Controller, XP Version or any of our products we offer can be found in this manual. If a problem or question is encountered that is not covered in the documentation provided, assistance is available Monday through Friday (except holidays), from 8 a.m. to 5 p.m. United States central time. To obtain assistance, please call Purge Solutions, Inc. at **832-368-7166**.

For assistance during times other than normal business hours, consult our World Wide Web Internet site at **http://www.purgesolutions.com**. This site includes equipment information, news releases, and other information. E-mail can be sent to **info@purgesolutions.com.**